Susol Super Solution

DC ACB

DC Air Circuit Breakers

LSIS

Susol *Super Solution*

DC Air Circuit Breakers

- DC 1500V class 3200AF Air Circuit Breaker
- Intelligent relay built-in for DC protection

DC Switch-Disconnectors

- DC 1500V class 4000AF Switch-Disconnectors

Applications

- Circuit breakers and Switch-Disconnectors for DC systems such as UPS, PV, and ESS

Contents

External configuration 16
Accessories 18
Ordering 20
DC ACB Trip relays 24
Accessories 26
Busbar connection 55
Control circuit diagram 60
Dimensions 64
Technical information 72
Time chart 76
Ordering sheet 82

UPS, PV, ESS, etc.
Optimization products for
DC System application

1500Vdc class
DC Air Circuit Breakers

1500Vdc class
DC Switch-Disconnectors

DC Air Circuit Breakers

DC Switch-Disconnectors

1500Vdc class Air Circuit Breakers

Air Circuit Breaker with DC Relay

Various protection functions and fault waveform provided

Electrical endurance with 10,000 operations

1600AF

3200AF

3P

4P

Icu = Ics

60kA@500Vdc 35kA@1000Vdc

ADH-16E	
1600AF	800A
	1000A
	1250A
	1600A

85kA@500Vdc 40kA@1000Vdc

ADH-32E	
3200AF	1600AF
	2000AF
	2500AF
	3200AF

60kA@750Vdc 50kA@1500Vdc

ADV-16E	
1600AF	800A
	1000A
	1250A
	1600A

70kA@750Vdc 60kA@1500Vdc

ADV-32E	
3200AF	1600AF
	2000AF
	2500AF
	3200AF

1500Vdc class Switch-Disconnectors

Suitable for severe inductive DC loads (DC-23A)

World's largest short-time capacity: 100kA / 1sec

DDH type

3P

DDV type

4P

Ue	1200Vdc	1500Vdc
Icw	100kA/1s	100kA/1s

DDH	
800AF	2000AF
1000AF	2500AF
1250AF	3200AF
1600AF	4000AF

DDV	
800AF	2000AF
1000AF	2500AF
1250AF	3200AF
1600AF	4000AF

Susol DC Air Circuit Breakers

1. 1500Vdc 3200AF Air Circuit Breaker for low voltage DC power distribution system
2. Optimized breaker for UPS, PV, ESS system application
3. Maximum short-time capacity 65kA/1sec
4. DC Multi-Function Relay:
   A, V, W Protection & measurement, self-diagnosis and fault waveform recording
5. Compatible with existing Susol ACB

Features

- Basic rating
  - Rated voltage: 1500Vdc (4p) / 1000Vdc (3p)
  - Rated current: 800 ~ 3200A
  - Short-time capacity: 65kA/1sec
  - Breaking capacity: 70kA @ 750Vdc, 60kA @ 1500Vdc
- Multi-function relays dedicated to DC protect and enhancing user convenience
  - Precise measurement of current, voltage, power and various protection relay functions
  - Self diagnosis function, event and fault waveform recording
- Electrical endurance:
  - 10,000 operations (1600A @ 1500Vdc)
  - 3,000 operations (3200A @ 1500Vdc)
- Isolation function convenient for withstand voltage test of switchgears
- Optional Short-Busbar considering temperature performance
- Compatible with existing Susol ACB
  - Accessories including closing and trip coils
  - Physical sizes for installation
- Applicable standards and tests: IEC 60947-2, DEKRA CB certification DEKRA CE

Susol DC Switch-Disconnectors

1. DC 1500V class 4000AF large capacity Switch-Disconnectors
2. World's largest short-time capacity: 100kA / 1sec
3. Suitable for severe inductive DC loads (DC-23A)
4. Compatible with existing Susol ACB

Features

- Basic rating
  - Rated voltage: 1500Vdc (DDV type), 1200Vdc (DDH type)
  - Rated current: 800 ~ 4000A
  - Icw = 100kA / 1s
  - Utilization Category: DC-23A
- Electrical endurance:
  - 10,000 operations (1600A @ 1500Vdc)
  - 2,000 operations (4000A @ 1500Vdc)
- Optional Short-Busbar considering temperature performance
- Compatible with existing Susol ACB
  - Accessories including closing and trip coils
  - Physical sizes for installation
- Applicable standards and tests: IEC 60947-3, DEKRA CB certification DEKRA CE

DC Air Circuit Breakers

ADV – 25 E 4 16 A

DC ACB
ADV
ADH

AF	
16	1600AF
25	2500AF
32	3200AF

No. of pole	
3	3Pole
4	4Pole

Rated current (Rating plug)	
08	800A
10	1000A
13	1250A
16	1600A
20	2000A
25	2500A
32	3200A

Connections	
Draw-out type	
J	Manual connection
A	Automatic connection
Fixed type	
H	Horizontal type
V	Vertical type
M	Upper-Horizontal/ Lower-Vertical
N	Upper-Vertical/ Lower-Horizontal
P	Front connected type

Note) 2500AF & 3200AF only provide with vertical type

Ratings

Type and ratings

Type				DC 1000V			DC 1500V		
Number of poles	(P)			3 / 4			3 / 4		
Rated operational voltage (Ue)	(Vdc)			750 (3P) / 1000 (4P)			1000 (3P) / 1500 (4P)		
Rated insulation voltage (Ui)	(V)			1500			1500		
Rated impulse withstand voltage (Uimp)	(kV)			12kV			12kV		
Version				Fixed / Withdrawable			Fixed / Withdrawable		
Suitability for isolation									
Degree of pollution	IEC60661-1			3			3		
Certification				CB certification according to IEC 60947-2			CB certification according to IEC 60947-2		
Brand name				**Susol**			**Susol**		
Ampere Frame				ADH-16E	ADH-25E	ADH-32E	ADV-16E	ADV-25E	ADV-32E
				1600AF	2500AF	3200AF	1600AF	2500AF	3200AF
Rated current (In) at 40℃	(A)			800/1000/1250/1600	1600/2000/2500	1600 / 2000 / 2500 / 3200	800/1000/1250/1600	1600/2000/2500	1600/ 2000/2500/3200
Rated ultimate breaking capacity (Icu)	(kA)	(3P)	500V DC	60	85		-		
			750V DC	40			60	70	
			1000V DC	-			50	60	
		(4P)	750V DC	50			-		
			1000V DC	32	40		60	70	
			1500V DC	-			50	60	
Rated serivce breaking capacity (Ics)	(%)			100			100		
Rated short-time withstand current (Icw)	(kA/1s)	(3P)	500V DC	60 Note1)	65		-		
			750V DC	40	45		50 Note1)	60	
			1000V DC	-			50 Note1)	50	
		(4P)	750V DC	50 Note1)	50		-		
			1000V DC	35	40		50 Note1)	65	
			1500V DC	-			50 Note1)	50	
Rated making capacity (Icm)	(kA peak)			100			100		
Utilization category (according to IEC 60947-2)				B			B		
Overcurrent protection	Electronic trip units for DC applications			●			●		
Operation time	(ms)	Total Breaking time	< Icw	max. 70			max. 70		
			> Icw	max. 30			max. 30		
		Closing time		max. 80			max. 80		
Mechanical and Electrical Life cycle									
Endurance (times) (Without maintenance)	Mechanical			15,000			15,000		
	Electrical (at 1000 V DC)		less than 1600A	10,000			10,000		
			2000A	8,000			8,000		
			2500A	-	5,000	3,000	-	5,000	3,000
Demension and Weight									
Weight (3P/4P)	(mm)	Drawout	Without cradle	43 / 53			43 / 53		
			With cradle	87 / 103			87 / 103		
		Fixed		44 / 55			44 / 55		
External dimensions (H×W×D)	(mm)	Drawout	3P(4P)	430×412(527)×375			430×412(527)×375		
		Fixed	3P(4P)	300×378(493)×295			300×378(493)×295		

Note 1) Duration of rated short-time withstand current (Icw) is 0.5s

DC Switch-Disconnectors

DDH – 40 E 4 00 A

Type	
DDH	1200Vdc
DDV	1500Vdc

AF	
08	800A
10	1000A
13	1250A
16	1600A
20	2000A
25	2500A
32	3200A
40	4000A

No. of pole	
3	3Pole
4	4Pole

Connections	
Draw-out type	
J	Manual connection
A	Automatic connection
Fixed type	
H	Horizontal type
V	Vertical type
M	Upper-Horizontal/ Lower-Vertical
N	Upper-Vertical/ Lower-Horizontal
P	Front connected type

Note) 4000AF only provide with vertical type

Ratings

Type and ratings

Commonness				Characteristics							
Rated insulation voltage (Ui)			(Vdc)	1500							
Rated impulse withstand voltage (Uimp)			(kV)	12							
Rated short-time withstand current (Icw)			(kA / 1s)	100							
Rated making capacity (Icm)			(kA, peak)	100							
Operation time		(ms)	Openning	Max. 40							
			Closing	Max. 80							
Version		Draw-out type		●							
		Fixed type		●							
Standard certification				DEKRA CB certification according to IEC 60947-3							
DC1,200V				**DDH**							
Type				**DDH-08E**	**DDH-10E**	**DDH-13E**	**DDH-16E**	**DDH-20E**	**DDH-25E**	**DDH-32E**	**DDH-40E**
Frame size		(AF)		800	1000	1250	1600	2000	2500	3200	4000
Rated operational voltage (Ue)		(V DC)	3Pole	750							
			4Pole	1200							
Utilization category (according to IEC 60947-3)				DC-22A							
Endurance (times) (Without maintenance)	Mechanical			15,000							
	Electrical	(Time constant 2ms)		3,000				2,000		1,000	
DC1,500V				**DDV**							
Type				**DDV-08E**	**DDV-10E**	**DDV-13E**	**DDV-16E**	**DDV-20E**	**DDV-25E**	**DDV-32E**	**DDV-40E**
Frame size		(AF)		800	1000	1250	1600	2000	2500	3200	4000
Rated operational voltage (Ue)		(V DC)	3Pole	1000 (1200V)*							
			4Pole	1500							
Utilization category (according to IEC 60947-3)				DC-23A (DC-22A)*							
Endurance (times) (Without maintenance)	Mechanical			15,000							
	Electrical*	(Time constant 7.5ms)		5,000				4,000	2,500	1,500	1,000
		(Time constant 2ms)		10,000				8,000	5,000	3,000	2,000
Demension and weight											
Weight (3P/4P)	Drawout	(kg)	Without cradle	43/53							43/53
			With cradle	87/103							107/139
	Fixed	(kg)		44/55							61/81
External dimensions (H×W×D)		(mm)	Drawout	430×412×375 (3P) / 430×527×375 (4P)							
			Fixed	300×378×295 (3P) / 300×493×295 (4P)							

∗ DDV 3Pole models can be used up to DC 1200V, but if the voltage exceeds DC 1000V, the following must be observed.
- Since Utilization category DC-22A is applied, it can not be used for DC circuit with time constant exceeding 2ms.
- Electrical endurance is reduced to 50% at time constant 2ms.

Trip Relay

Intelligent trip relay for DC system protection

- LSIG relay function provided for DC system protection
- Load control function
- Provides wide protection function through relay group control
- Start-up function preventing malfunction from starting current and inrush current of specific loads
- Provides various measurement information: voltage, current, power, energy
- Self-diagnosis and fault recording function
- Remote control via communication
- Rating Plug enables the change of rated current without sensor replacement

Dedicated DC1500V Trip Relay

Rating Plug

Rating Plug

Easy to change rated current (In) without CT replacement

- Rating Plugs for 1600AF: 800, 1000, 1250, 1600A
- Rating Plugs for 2500AF: 1600, 2000, 2500A
- Rating Plugs for 3200AF: 1600, 2000, 2500, 3200A

S type「Supreme meter」functions

Overload protection
- Long-time delay
- Thermal

Short-circuit protection
- Short-time delay/Instantaneous
- I^2t On/Off optional (for short-time delay)

Ground fault protection
- I^2t On/Off optional
- Alarm/Trip selectable

Protection against Over voltage/Under voltage/ Unbalance/Reverse power

ZSI (Zone Selective Interlocking) for protective coordination

Measurement and Display
- Measurement for Current/Voltage/ Power/Energy/Demand
- 128 x 128 Graphic LCD

Start-up
- Avoiding breaker trip due to inrush and starting current of specified load such as motor

Controlling relay group
- Providing different relay areas as two groups: Relay can be set up quickly according to load change condition

Load control
- Providing output contacts to have non-critical loads disconnected for efficient power management

Fault recording
- Records Max. up to 128 fault information about fault type, fault phase, fault value, occurrence time of fault
- Fault wave recording: the latest 4 fault waveform, each waveform recorded during 128ms before and after the fault

Event recording
- Records events of device related to setting change, operation and state change. (Max. up to 128)

SBO (Select Before Operation)
- High reliability for control and setting change method

Self-diagnosis function
- Trip device connection check
- Rating plug check
- Temperature monitoring
- Trip test

4 DO (Digital output)
- Programmable for alarm, trip and general DO

Communication
- Modbus/RS485

Connection

Diverisified terminal connection methods of the DC ACB main circuit for users.

Various installation methods

Standard connection

Horizontal type

Vertical type

Front type

Mixed connection

Horizontal / Vertical type

Vertical / Horizontal type

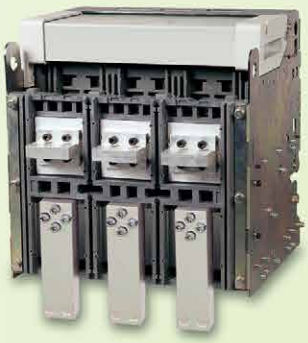

Horizontal / Front type

Vertical / Front type

Front / Horizontal type

Front / Vertical type

- The Front connection type is suitable for narrow-depth panels.
- The connection can be modified between vertical type and horizontal type by rotating the terminals through 90 degrees for the breakers such as ADH-16E and DDH / DDV-08 ~ 32E. (ADH/ADV-25/32E and DDH/DDV-40E types are equipped with vertical-only terminals)

External configuration

DC ACB

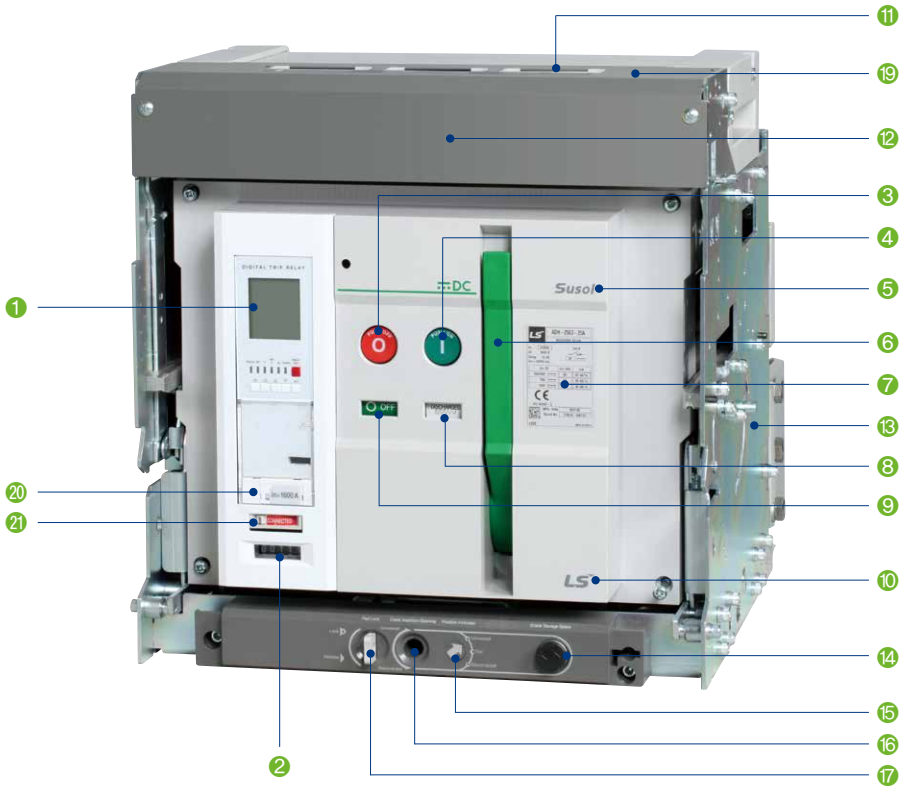

Marking

[Acronym explanation]

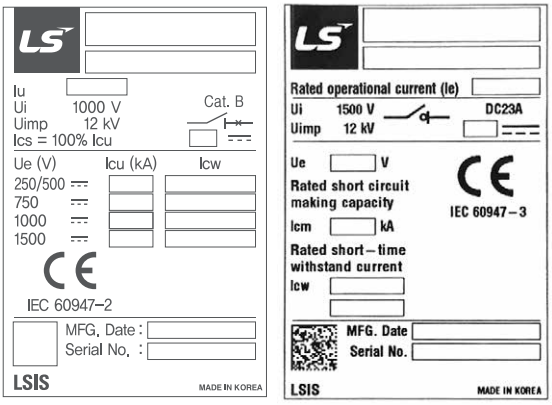

- Ui: Rated insulation voltage
- Uimp: Impulse withstand voltage
- Ue: Rated operational voltage
- Icu: Ultimate breaking capacity
- Ics: Service breaking capacity
- Icw: Short time withstand capacity
- Icm: Rated making capacity
- MFG. Date: Manufacturing date

[Secondary nameplate]

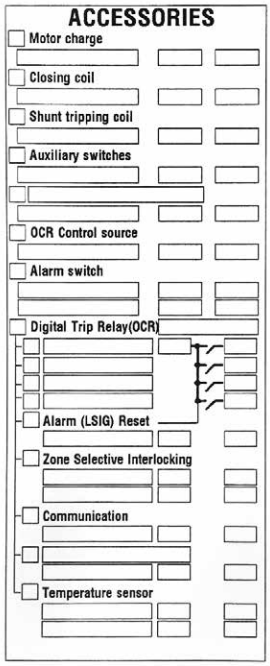

Explanation of terminologies

- Motor charge
- Closing coil
- Shunt tripping coil

Control power and terminal No.

- Auxiliary switches: Contact specification and terminal No.
- Under voltage trip: UVT terminal No.
- OCR control source: Trip relay control power
- Alarm switch: Alarm and terminal No.
- Digital trip relay: Switching diagram
- Z.S.I: Input/Output terminal No.
- Reset: LED/LCD reset
- Communication: Communication and terminal No.

DC Switch-Disconnectors

Terms

1. Trip relay
2. Operation counter
3. OFF button
4. ON button
5. Product series
6. Manual charging handle
7. Name plate
8. Charging indicator
9. ON/OFF Indicator
10. Corporation logo
11. Zero Arc space
12. Safety control cover
13. Cradle
14. Draw-out handle
15. Position indicator
16. Handle inserting hole
17. Pad lock button
18. Arc chute
19. Control terminal block
20. Rating Plug
21. Isolator

ACB main body

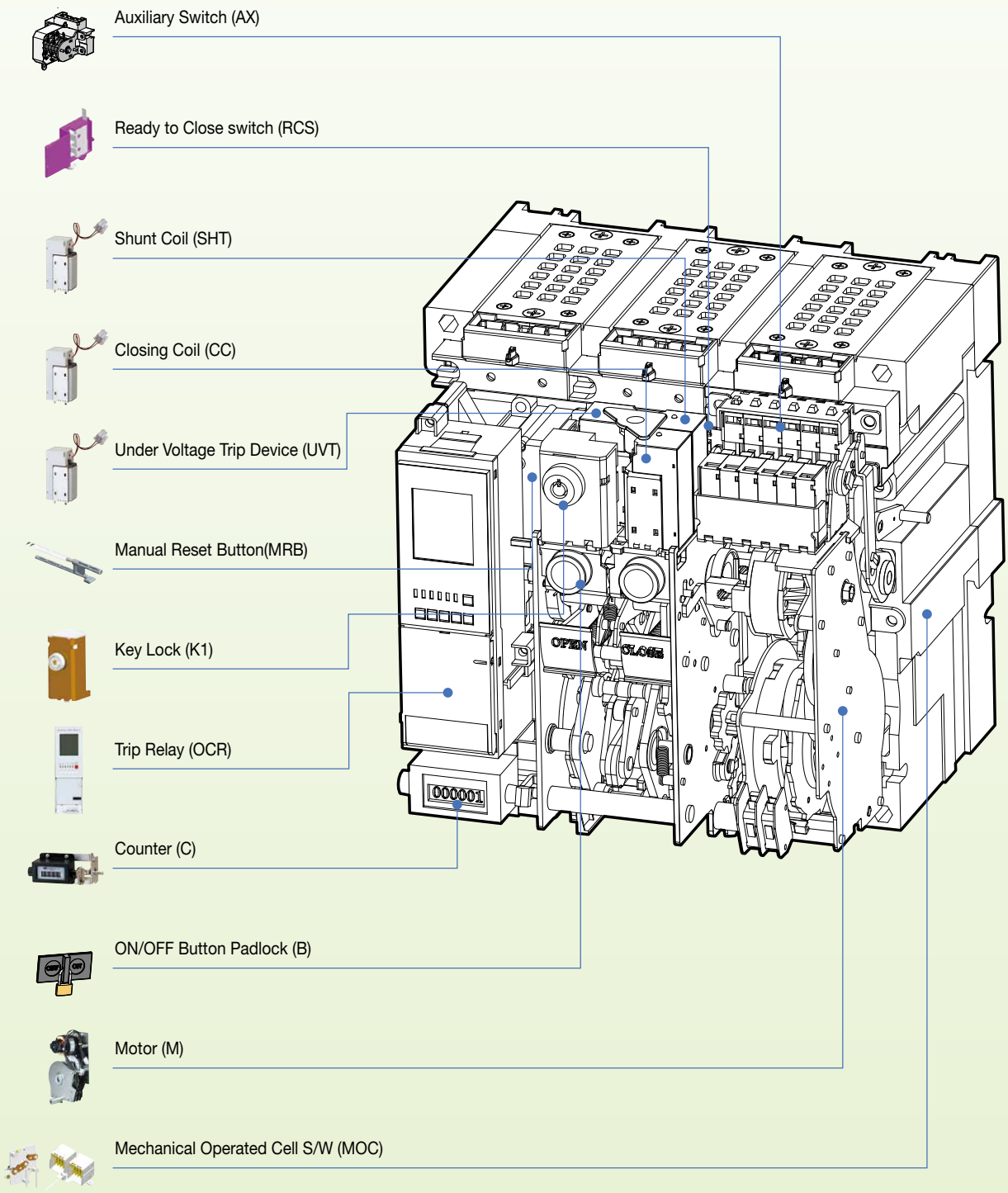

Cradle

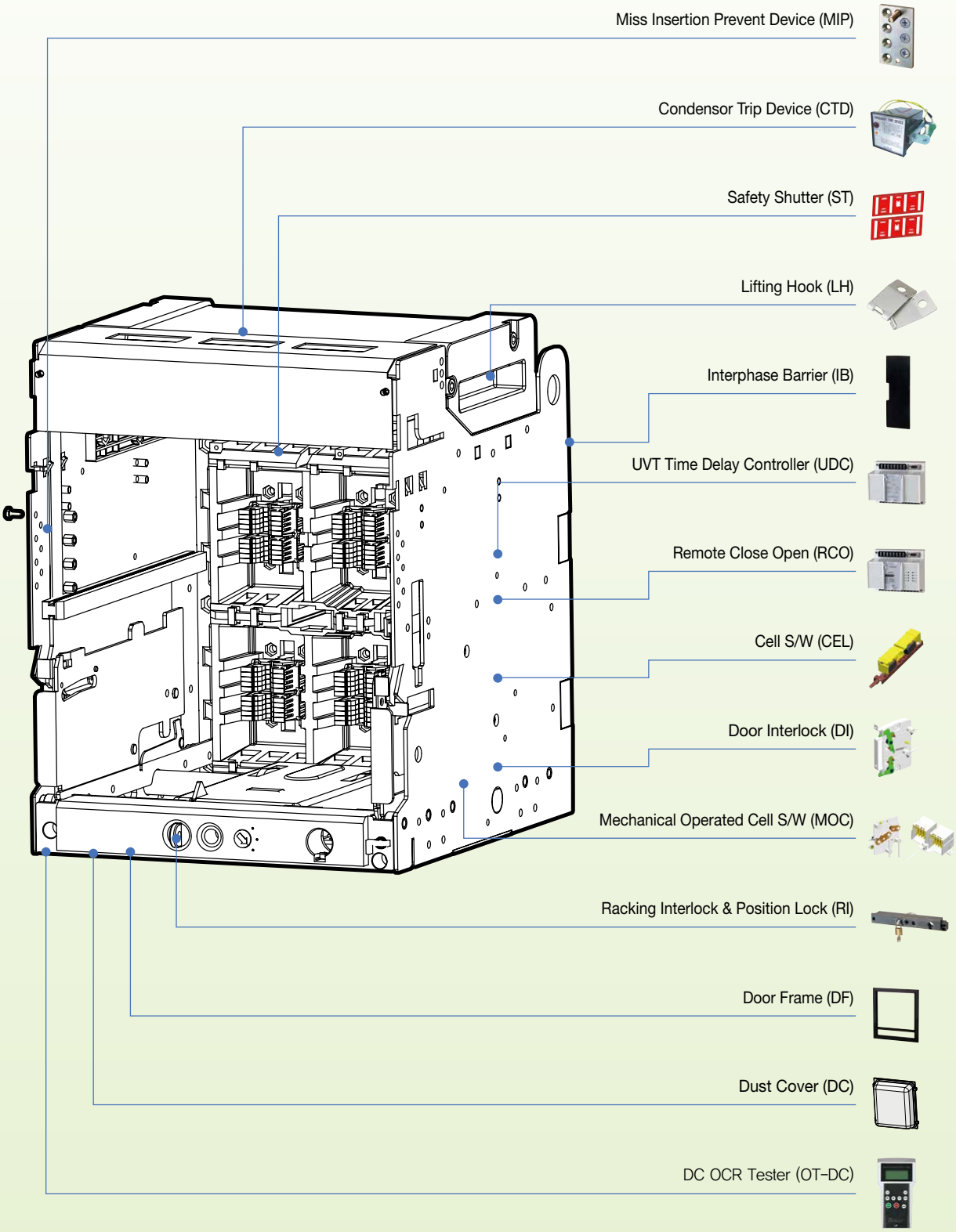
Miss Insertion Prevent Device (MIP)
Condensor Trip Device (CTD)
Safety Shutter (ST)
Lifting Hook (LH)
Interphase Barrier (IB)
UVT Time Delay Controller (UDC)
Remote Close Open (RCO)
Cell S/W (CEL)
Door Interlock (DI)
Mechanical Operated Cell S/W (MOC)
Racking Interlock & Position Lock (RI)
Door Frame (DF)
Dust Cover (DC)
DC OCR Tester (OT-DC)

Ordering

DC ACB main body

ADV — **25** **E** **4** — **16** **A**

Type	
ADV	DC ACB
ADH	

Ampere Frame	
16	1600AF
25	2500AF
32	3200A

No. of pole	
3	3Pole (750 Vdc)
4	4Pole (1000 Vdc)

Rated current (CT)	
08	800A
10	1000A
13	1250A
16	1600A
16	1600A
20	2000A
25	2500A
16	1600A
20	2000A
25	2500A
32	3200A

Connections	
Draw-out type	
J	Manual connection
A	Automatic connection
Fixed type (Terminal)	
H	Horizontal type
V	Vertical type
M	Upper-Horizontal/ Lower-Vertical
N	Upper-Vertical/ Lower-Horizontal

Note) Fixed 2500AF and 3200AF are only available in vertical type

DC ACB cradle

DAL — **H16E** **4** — **J** **H** **E** **S**

Type	
DAL	DC ACB

Ampere Frame	
H16E	1600AF
H25E	2500AF
V32E	3200AF

No. of pole	
3	3Pole
4	4Pole

Secondary connections	
J	Manual connection
A	Automatic connection

External connections	
H	Horizontal type
V	Vertical type
M	Upper-Horizontal/ Lower-Vertical
N	Upper-Vertical/ Lower-Horizontal
P	Front (Flat) type

Note) Fixed 2500AF and 3200AF are only available in vertical type

Safety shutter	
E	Without safety shutter
F	With safety shutter

Zero arc space	
S	With Arc cover

DC ACB accessories

M1 — Motor rated voltage

MA	Without motor
M1	AC/DC 100V~130V
M2	AC/DC 200V~250V
M3	DC 125V
M4	DC 24V~30V
M5	DC 48V~60V
M6	AC 380V~415V
M7	AC 440V~480V
M8	AC 48V

D1 — Closing coil rated voltage

D0	Without closing coil
D1	AC/DC 100V~130V
D2	AC/DC 200V~250V
D3	DC 125V
D4	DC 24V~30V
D5	DC 48V~60V
D6	AC 380V~480V
D7	AC 48V

D1 — Shunt coil rated voltage

D0	Without Shunt coil
D1	AC/DC 100V~130V
D2	AC/DC 200V~250V
D3	DC 125V
D4	DC 24V~30V
D5	DC 48V~60V
D6	AC 380V~480V
D7	AC 48V

AX — Aux. contact & charging types

AX	Standard OFF - Charge 3a3b
AC	Standard ON - Charge 3a3b
BX	Standard OFF - Charge 5a5b
BC	Standard ON - Charge 5a5b
HX	High capacity OFF - Charge 5a5b
HC	High capacity ON - Charge 5a5b
CC	Standard ON - Charge 6a6b
JC	High capacity ON - Charge 6a6b
GX	High capacity OFF - Charge 3a3b
GC	High capacity ON - Charge 3a3b
TX	TCS OFF - Charge 4a4b Note)
TC	TCS ON - Charge 5a5b Note)

Note) TCS: Trip Circuit Supervision
The terminal supervising trip circuit and monitering disconnection or disable of trip

SD1 — Trip relay

SD1	DC

U1 — UVT coil rated voltage

U0	Without UVT Coil
U1	AC/DC 100V~130V
U2	AC/DC 200V~250V
U3	DC 125V
U4	DC 24V~30V
U5	DC 48V~60V
U6	AC 380V~480V
U7	AC 48V

* UVT Delay module is available over AC/DC 48V

AL — Option table

AL	AL1 + MRB		
A1	AL1 + MRB + RES (AC 110~130V) *AC private use		
A2	AL1 + AL2 + MRB (Two a contacts are provided)		
A3	AL1 + MRB + RES (DC 110-125V) *DC private use		
A4	AL1 + MRB + RES (AC 200-250V) *AC private use		
A5	AL1 + MRB + Autoreset		
A6	AL1 + AL2 + MRB + Autoreset		
A7	AL1 + MRB + RES (DC 110-125V) + Autoreset *DC private use		
A8	AL1 + MRB + RES (AC 200-250V)+Autoreset *AC private use		
A9	AL1 + MRB + RES (AC 110-130V)+Autoreset *AC private use		
Z2	AL1 + AL2 + MRB (One a contact and one b contact are provided)		
S	CS2	Charge switch communication	
B	B	ON/OFF Button lock	
M	MI	Mechanical interlock	
D	DI or MOC	Mechanism operated cell switch	
K	K1	Key lock	
K2	K2	Key interlock set	
K3	K3	Key lock double	
R	RCS	Ready to close switch	
T	TM	Temperature monitoring	
H1	SHT2	AC/DC 100~130V	Sencondary shunt coil
H2		AC/DC 200~250V	
H3		DC 125V	
H4		DC 24~30V	
H5		DC 48~60V	
H6		AC 380~480V	
H7		AC 48V	
P1	Lower supply (Only fixed type applied)		
P2	Upper supply (Only fixed type applied)		

Ordering

DC Switch-Disconnectors main body

DDH – 40 E 4 – 00 A

Type	
DDH	1200Vdc
DDV	1500Vdc

Ampere Frame	
08	800AF
10	1000AF
13	1250AF
16	1600AF
20	2000AF
25	2500AF
32	3200AF
40	4000AF

No. of pole	
3	3Pole DDH (750Vdc)
	3Pole DDV (1,000Vdc)
4	4Pole DDH (1,200Vdc)
	4Pole DDV (1,500Vdc)

Connections	
Draw-out type	
J	Manual connection
A	Automatic connection
Fixed type (Terminal)	
H	Horizontal type
V	Vertical type
M	Upper-Horizontal/ Lower-Vertical
N	Upper-Vertical/ Lower-Horizontal

Note) 40000AF only provide with vertical type

DC Switch-Disconnectors cradle

AL – H16E 4 – J H E S

Type	
AL	Constant≤2ms
DAL	Constant>2ms

Ampere Frame	
H08E	800AF
H10E	1000AF
H13E	1250AF
H16E	1600AF
H20E	2000AF
H25E	2500AF
H32E	3200AF
H40E	4000AF

No. of pole	
3	3Pole
4	4Pole

Secondary connections	
J	Manual connection
A	Automatic connection

External connections	
H	Horizontal type
V	Vertical type
M	Upper-Horizontal/ Lower-Vertical
N	Upper-Vertical/ Lower-Horizontal
P	Front (Flat) type

Note) 4000AF only provide with vertical type

Safety shutter	
E	Without safety shutter
F	With safety shutter

Zero arc space	
N	Without arc cover
S	With arc cover

※ DAL is the basic arc cover

DC Switch-Disconnectors accessories

M1 | D1 | D1 | GX | 000 | U1 | AL

Motor rated voltage	
MA	Without motor
M1	AC/DC 100V~130V
M2	AC/DC 200V~250V
M3	DC 125V
M4	DC 24V~30V
M5	DC 48V~60V
M6	AC 380V~415V
M7	AC 440V~480V
M8	AC 48V

Closing coil rated voltage	
D0	Without closing coil
D1	AC/DC 100V~130V
D2	AC/DC 200V~250V
D3	DC 125V
D4	DC 24V~30V
D5	DC 48V~60V
D6	AC 380V~480V
D7	AC 48V

Shunt coil rated voltage	
D0	Without Shunt coil
D1	AC/DC 100V~130V
D2	AC/DC 200V~250V
D3	DC 125V
D4	DC 24V~30V
D5	DC 48V~60V
D6	AC 380V~480V
D7	AC 48V

Trip relay	
000	Without trip relay

Aux. contact & charging types	
AX	Standard OFF - Charge 3a3b
AC	Standard ON - Charge 3a3b
BX	Standard OFF - Charge 5a5b
BC	Standard ON - Charge 5a5b
HX	High capacity OFF - Charge 5a5b
HC	High capacity ON - Charge 5a5b
CC	Standard ON - Charge 6a6b
JC	High capacity ON - Charge 6a6b
GX	High capacity OFF - Charge 3a3b
GC	High capacity ON - Charge 3a3b
TX	TCS OFF - Charge 4a4b Note)
TC	TCS ON - Charge 5a5b Note)

Note) TCS: Trip Circuit Supervision
The terminal supervising trip circuit and monitering disconnection or disable of trip

UVT coil rated voltage	
U0	Without UVT Coil
U1	AC/DC 100V~130V
U2	AC/DC 200V~250V
U3	DC 125V
U4	DC 24V~30V
U5	DC 48V~60V
U6	AC 380V~480V
U7	AC 48V

* UVT Delay module is available over AC/DC 48V

Option table

S	CS2	Charge switch communication	
B	B	ON/OFF Button lock	
M	MI	Mechanical interlock	
D	DI or MOC	Mechanism operated cell switch	
K	K1	Key lock	
K2	K2	Key interlock set	
K3	K3	Key lock double	
R	RCS	Ready to close switch	
T	TM	Temperature monitoring	
H1	SHT2	AC/DC 100~130V	Sencondary shunt coil
H2		AC/DC 200~250V	
H3		DC 125V	
H4		DC 24~30V	
H5		DC 48~60V	
H6		AC 380~480V	
H7		AC 48V	
P1	Lower supply (Only fixed type applied)		
P2	Upper supply (Only fixed type applied)		

S type: 「Supreme meter」 type

■ **Overload protection**
- Long-time delay
- Thermal

■ **Short-circuit protection**
- Short-time delay / Instantaneous
- I^2t On/Off optional (for short-time delay)

■ **Ground fault protection**
- Ground fault: Available to select I^2t On / Off
- Alarm / Trip selectable

■ **Start-up protection**
- Short time, instantaneous, ground fault protection
- Start-up Setting current and holding time setting

■ **Controlling relay group**
- Dual setting possible: Group A and B selection

■ **Load control**
- Load control setting current input

■ **Fault recording**
- Records Max. up to 128 fault information about fault type, fault phase, fault value, occurrence time of fault
- Record the 4 most recent accident waveforms (Accident waveform storage for each 128ms before and after an accident)

■ **Event recording**
- Records events of device related to setting change, operation and state change. (Max. up to 128)

■ **Self-diagnosis function**
- Trip coil connection check
- Rating plug normal check
- Temperature monitoring
- Trip test

■ **Communication**
–Modbus / RS485

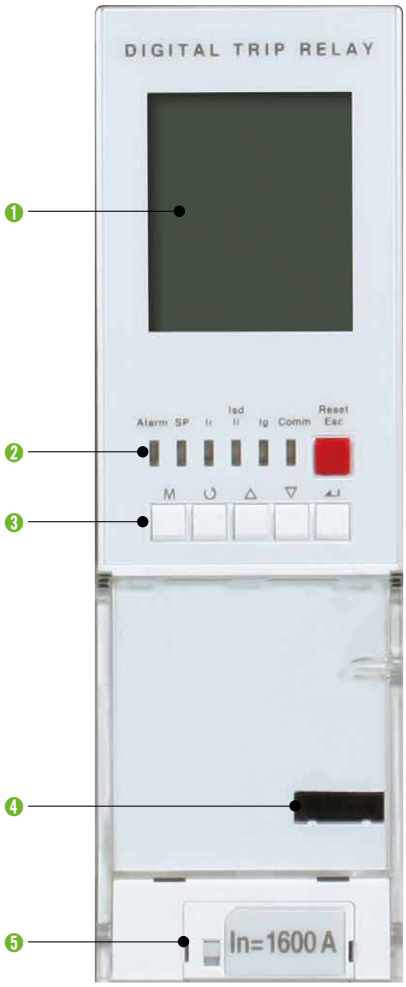

❶ Graphic LCD: Indication of measurement and information

❷ LED: Indication of trip info. and overload state

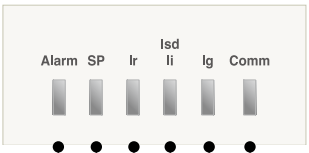

Comm: LED indicating comm. state (Blink when running)
Ig: LED indicating ground-fault
Isd/Ii: LED indicating short-time or instantaneous tripping
Ir: LED indicating long-time delay
SP: Self-protection LED and battery test LED
Alarm: LED indicating an overload
(Turn on above 90%, Blink above 105%)

❸ Key: Move to menu or reset

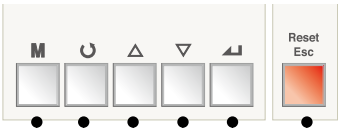

Reset / ESC: Fault reset or ESC from menu
Enter: Enter into secondary menu or setting input
Up / Down: Move the cursor up / down on screen or increase / decrease a setting value
Right / Left: Move the cursor or setting right / left on screen (Rotation)
Menu: Menu display ↔ Measurement display

❹ Test terminal: OCR test terminal (Connected with OCR tester)

❺ Rating Plug: Rated current (In)

Protection

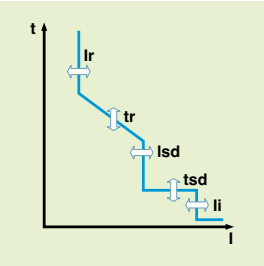

Long-time (OCR-L)												
Pick-up (A)	Ir = In ×...		40%~100% (5% Step) * Tripping between 1.05 and 1.2×Ir									
Time delay (s)	tr@ (1.5×Ir)		11.2	22.5	45.1	90.2	180.5	270.8	361.1	451.4	541.7	Off
Accuracy: ±10% or	tr@ (6.0×Ir)		0.5	1	2	4	8	12	16	20	24	Off
less than ±100ms	tr@ (7.2×Ir)		0.34	0.69	1.38	2.7	5.5	8.3	11	13.8	16.5	Off
Short time (OCR-S / OCR-S2)												
Pick-up (A) Accuracy : ±10%	Isd = Ir ×...		150%~1000%, Off (5% Step)									
Current setting (s) Accuracy: ±10% or ±50ms 이하	tsd	I²t Off	0.05s~0.4s, 0.05s Step									
		I²t On	(In case of I²t On, @10×Ir)									
Start-up Setting	Pick-up		150%~1000%(×Ir), Off (5% Step)									Start-up function is available when tsd is set to I²t Off
	Time delay (s)		0.10~30.00s, 0.05s Step									
Instantaneous (OCR-I)												
Pick-up (A)	Ii = In ×...		150%~1000%, Off (5% Step)									
Time delay			이하 50ms									
Start-up Setting	Pick-up		150%~1000%(×Ir), Off (5% Step)									
	Time delay (s)		0.10~30.00s, 0.05s Step									
Ground fault (OCR-Ig)												
Pick-up (A)	Ig = In ×...		20%~100%, Off (5% Step)									
Time delay (s) Accuracy : ±10% (Ig>0.4In) ±20% (Ig≤0.4In)	tg	I²t Off	0.10s~3.00s, 0.05s Step (In case of I²t On, @1 x In)									
		I²t On										
Start-up Setting	Pick-up		150%~1000%(x In), Off (5% Step)									Start-up function is available when tsd is set to I²t Off
	Time delay (s)		0.10~30.00s, 0.05s Step									

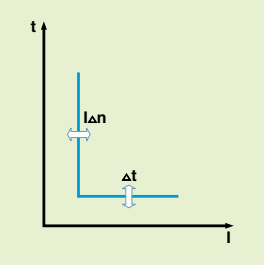

Note) 1. Switch on to fault time: 100ms

Other Protection	Pick-up			Time delay (s)		
	Setting range	Step	Accuracy	Setting range	Step	Accuracy
Under voltage (UVR)	50%~95%	5%	±5%	1.2s~40.00s	0.1s	±10%
Over voltage (OVR)	105%~120%					
Current unbalance (UNBAL)	5%~90%	5%	±5% (Imax-Imin)×(±2%)	0.50s~60.00s	0.1s	±10%
Reverse power (RPR)	-10%~-30%	5%	10%	0.50s~60.00s	0.1s	±10%

* Under voltage setting
- Rated voltage
  1000~160V: 50~95%, 159~146V : 55~95%, 145~134V : 60~95%, 133~124V : 65~95%, 123~115V : 70~95%, 114~107V : 75~95%, 106~110V: 80~95%

* Over voltage setting
- Rated voltage
  100~917V: 105~120%, 918~957V : 105~115%, 958~1000V : 105~110%

* Current unbal

Accessories

Main body

Mounting	Type	Accessories	DC ACB		Remark Note1)	Page
			Standard	Option		
Internal	SHT 1	Shunt coil	●	-	*	28
	SHT 2	Double Shunt coil	-	○	*	29
	CC	Closing coil	●	-	*	30
	M	Motor	●	-	*	31
	CS1	Charge switch	●	-	*	31
	CS2	Charge switch communication	-	○	*	31
	UVT	Under Voltage Trip device	-	○	*	32
	AL	Trip Alarm Contact	-	○	*	33
	MRB	Manual Reset Button	-	○	*	34
	RES	Remote Reset switch	-	○	*	35
	RCS	Ready to Close switch	-	○	*	36
	C	Counter	●	-	*	36
	AX	Auxiliary switch	-	○	*	37
	TM	Temperature alarm	-	○	* Note2)	53
External	K1	Key Lock	-	○	*	38
	K2	Key Interlock Set	-	○	*	38
	K3	Double Key Lock	-	○	*	39
	B	ON/OFF Button lock	-	○	*	39
	LH	Lifting hook	-	○	-	40
	CTD	CTD (Condenser trip device)	-	○	-	40
	ATS	ATS Controller (Automatic transfer switch Controller)	-	○	-	55
	DC	Dust cover	-	○	-	
	OT	OCR Tester	-	○	-	41
	A	Auto Connector	●	-	*	
	P1	Lower power input type (Fixed type only)	-	○	-	56
	P2	Top power input type (Fixed type only)	-	○	-	56

Note) 1. * Seperate purchasing is not allowed. Each item should be purchased with the main body.
2. The temperature sensor is shipped inside the body, and temperature monitoring modules are sold separately.

Cradle

Mounting	Type	Accessories	DC ACB		Remark Note)	Page
			Standard	Option		
Cradle	SBC	Shorting "b" contact	-	○	-	42
	MI	Mechanical interlock	-	○	-	44
	ST	Safety shutter	-	○	*	44
	STL	Safety shutter lock	-	○	-	45
	DF	Door Frame	-	○	-	45
	MIP	Miss insertion prevent device	-	○	-	51
	MOC	Mechanical operated cell switch	-	○	-	43
	CEL	Cell Switch	-	○	-	47
	DI	Door Interlock	-	○	-	48
	ZAS	Zero Arc Space (Arc cover)	●	-	*	48
	SC	Safety control cover	●	-	*	49
	RI	Racking interlock	-	○	-	49
	PL	Pad Lock / Position Lock	●	-	*	50
	IB	Interphase Barrier	●	-	Optional	46
	UDC	UVT time delay controller	-	○	Optional	52
	ADP	Compatible Adapter	-	○	-	
Other	DUM	Dummy ACB	-	○	-	
	VAD	Various Connection Type	-	○	-	
	RCO	Remote I/O	-	○	-	54

Note) * Seperate purchasing is not allowed. Each item should be purchased with the main body.

Shunt coil [SHT1]

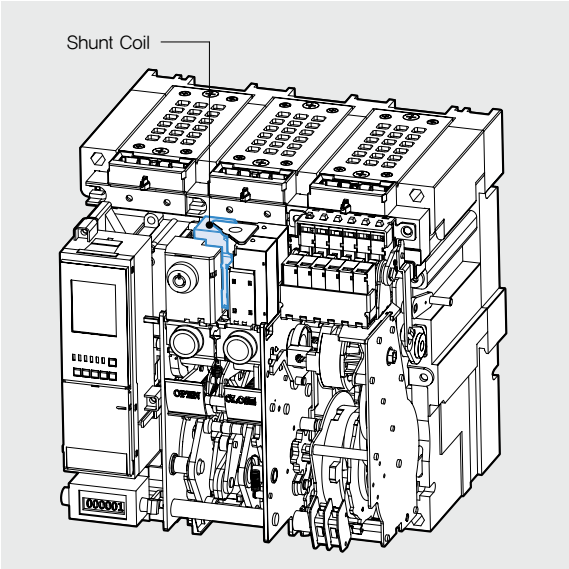

- SHT1 is a control device which trips a circuit breaker from remote place, when applying voltage continuously or instantaneously over 200ms to coil terminals(C1, C2).
- When UVT coil is installed, its location is changed.

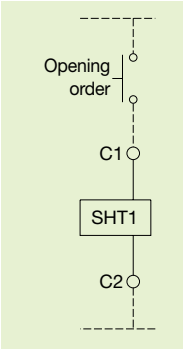

Wiring diagram

1. Rated voltage and characteristics of trip coil

Rated voltage (Vn)		Operating voltage range (V)	Power consumption (VA or W)		Trip time (ms)
DC (V)	AC (V)		Inrush	Steady–state	
24~30	–	0.7~1.1 Vn	200	5	40
48~60	48	0.7~1.1 Vn			
100~130	100~130	0.7~1.1 Vn			
200~250	200~250	0.7~1.1 Vn			
–	380~480	0.7~1.1 Vn			

Note) Operating voltage range is the min. rated voltage standard for each rated voltage (Vn).

2. Specification of the wire

- Refer to the below table regarding the length and specification of wire when using trip coil with DC 24~30V or DC / AC 48~60V of rated voltage.

The maximum wire length

		Rated voltage (Vn)			
		DC 24~30V		DC / AC 48V	
Wire type		#14 AWG (2.08mm²)	#16 AWG (1.31mm²)	#14 AWG (2.08mm²)	#16 AWG (1.31mm²)
Operating voltage	100%	95.7m	61m	457.8m	287.7m
	85%	62.5m	38.4m	291.7m	183.2m

Double Shunt coil [SHT2]

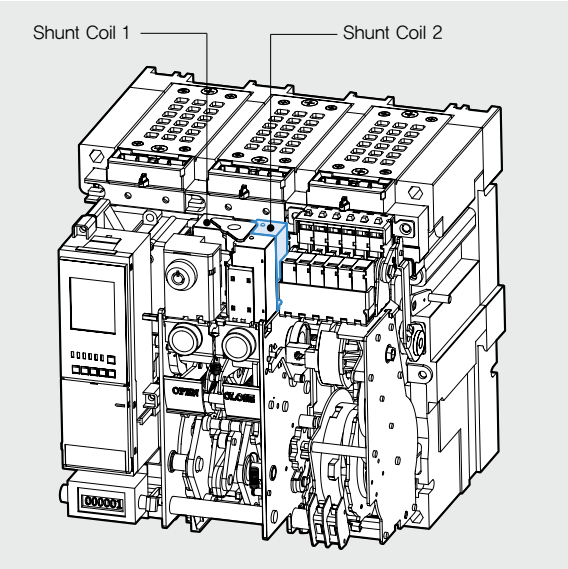

- SHT2 is a control device which trips a circuit breaker doubly from the outside. When SHT1 doesn't operate normally, it can trip a circuit breaker safely.
- Shunt coil 1: Install it at existing location.
- Shunt coil 2: Install it on the right side of the Shunt coil 1
- It is not available with UVT coil when installing double shunt coil.

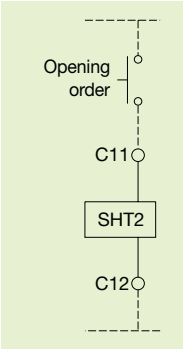

Wiring diagram

1. Rated voltage and characteristics of trip coil

Rated voltage (Vn)		Operating voltage range (V)	Power consumption (VA or W)		Trip time (ms)
DC (V)	AC (V)		Inrush	Steady-state	
24~30	–	0.7~1.1 Vn	200	5	40
48~60	48	0.7~1.1 Vn			
100~130	100~130	0.7~1.1 Vn			
200~250	200~250	0.7~1.1 Vn			
–	380~480	0.7~1.1 Vn			

Note) Operating voltage range is the min. rated voltage standard for each rated voltage (Vn).

2. Specification of the wire

- Refer to the below table regarding the length and specification of wire when using trip coil with DC 24~30V or DC / AC 48~60V of rated voltage.

The maximum wire length

		Rated voltage (Vn)			
		DC 24~30V		DC / AC 48V	
Wire type		#14 AWG (2.08mm²)	#16 AWG (1.31mm²)	#14 AWG (2.08mm²)	#16 AWG (1.31mm²)
Operating voltage	100%	95.7m	61m	457.8m	287.7m
	85%	62.5m	38.4m	291.7m	183.2m

Closing Coil [CC]

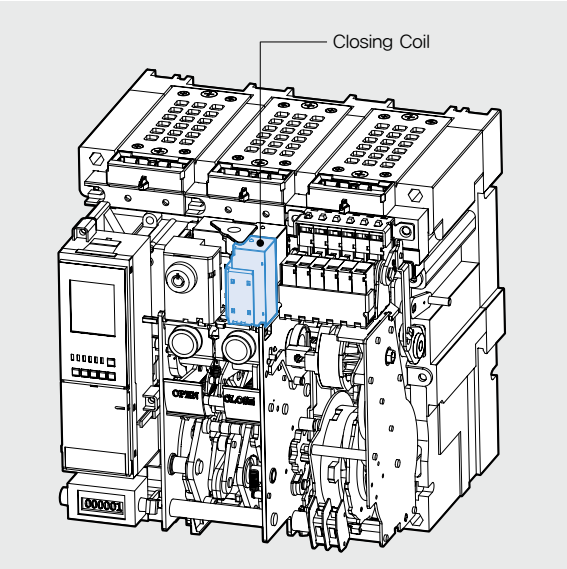

- It is a control device which closes a circuit breaker, when the voltage is applied continuously or instantaneously over 200ms to the coil terminals (A1, A2).

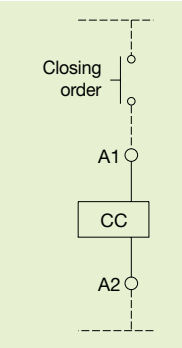

Wiring diagram

1. Rated voltage and characteristics of closing coil

Rated voltage (Vn)		Operating voltage range (V)	Power consumption (VA or W)		Trip time (ms)
DC (V)	AC (V)		Inrush	Steady–state	
24~30	–	0.85~1.1 Vn	200	5	80
48~60	48	0.85~1.1 Vn			
100~130	100~130	0.85~1.1 Vn			
200~250	200~250	0.85~1.1 Vn			
–	380~480	0.85~1.1 Vn			

Note) Operating voltage range is the min. rated voltage standard for each rated voltage (Vn).

2. Specification of the wire

- Refer to the below table regarding the length and specification of wire when using trip coil with DC 24~30V or DC / AC 48~60V of rated voltage.

The maximum wire length

		Rated voltage (Vn)			
		DC 24~30V		DC / AC 48V	
Wire type		#14 AWG (2.08mm²)	#16 AWG (1.31mm²)	#14 AWG (2.08mm²)	#16 AWG (1.31mm²)
Operating voltage	100%	95.7m	61m	457.8m	287.7m
	85%	62.5m	38.4m	291.7m	183.2m

Motor [M]

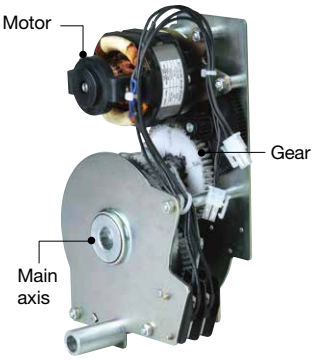

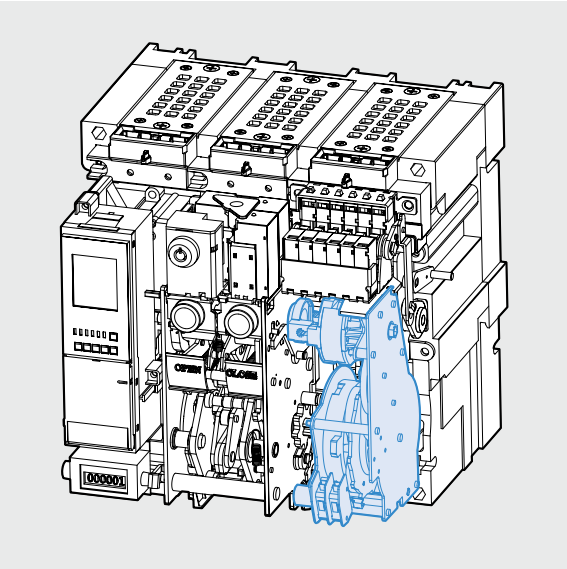

- Charge the closing spring of a circuit breaker by the external power source. Without the external power source, charge manually.
- Operating voltage range (IEC 60947) 85%~110%Vn

Input voltage (V)	DC 24~30V	AC / DC 48~60V	AC / DC 100~130V	AC / DC 200~250V	AC 380V	AC 440~480V
Load current (max.)	5A	3A	1A	0.5A	0.3A	0.3A
Starting current (Max.)	5 times of load current					
Load rpm (Motor)	15,000~19,000 rpm					
Charge time	Less than 5sec.					
Dielectric strength	2kV/min					
Using temperature range	- 20˚~ 60˚					
Using humidity range	Max. RH 80% (No dew condensation)					
Endurance	15,000 cycle (Load connection, 2 times / min)					
Charge switch	10A at 250VAC					

Charge switch [CS1]
Charge switch communication [CS2]

- It is a built-in contact which sends the signal to the outside, when motor charging is completed. (2a)
- It has a “1a” contact for communication and the other “1a” contact for complete charging.
- When using an extra communication module (Remote I/O), the state of contacts can be displayed through the network.
- The electrical characteristics of the contact are the same as the AL contact, see page 33

Under Voltage Trip device [UVT]

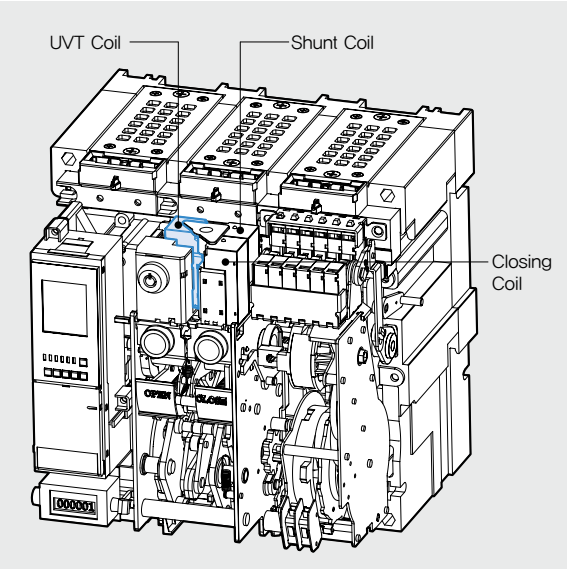

- If the voltage of the main or the control power is under voltage, UVT which is installed inside of the breaker breaks the circuit automatically.
  Please connect with UVT time-delay device in order to present the time-delay function because UVT is technically instantaneous type.
- The closing of a circuit breaker is impossible mechanically or electrically if control power not supplied to UVT.
  To close the circuit breaker, 65~85% of rated voltage should be applied to both terminals of UVT coil (D1, D2).
- When using UVT coil, the double trip coil can not be used, and the location of trip coil is changed.

1. Rated voltage and characteristics of UVT coil

Rated voltage (Vn)		Operating voltage range (V)		Power consumption (VA or W)		Trip time (ms)
DC (V)	AC (V)	Pick up	Drop out	Inrush	Steady-state	
24~30	–	0.65~0.85 Vn	0.4~0.6 Vn	200	5	50
48~60	48					
100~130	100~130					
200~250	200~250					
–	380~480					

Note) Operating voltage range is the min. rated voltage standard for each rated voltage (Vn).

2. Specification of the wire

- Refer to the below table regarding the length and specification of wire when using trip coil with DC 24~30V or DC / AC 48~60V of rated voltage.

The maximum wire length

		Rated voltage (Vn)			
		DC 24~30V		DC / AC 48V	
Wire type		#14 AWG (2.08mm²)	#16 AWG (1.31mm²)	#14 AWG (2.08mm²)	#16 AWG (1.31mm²)
Operating voltage	100%	95.7m	61m	457.8m	287.7m
	85%	62.5m	38.4m	291.7m	183.2m

Note) In case of using UVT coil, the location of Shunt coil is changed.

Trip Alarm Contact [AL]

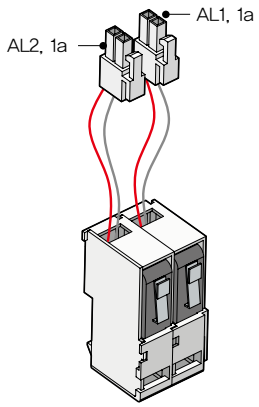

- When a circuit breaker is tripped by OCR which operates against the fault current (Over Current Relay), Trip Alarm switch provides the information regarding the trip of circuit breaker by sending the electrical signal from the mechanical indicator on front cover of main circuit breaker or internal auxiliary switch. (Installed at the inside of circuit breaker)

- When a circuit breaker tripped by fault current, a mechanical trip indicator (MRB, Manual Reset Button) pops out from the front cover and the switch (AL) which sends control signal electrically is conducted to output the information occurred from fault circuit breaker.

- MRB and AL can be operated only when tripping by OCR, but doesn't be operated by OFF button and OFF operation of trip coil.

- For the manual reset type circuit breaker, to reset the circuit breaker after a circuit breaker trip, push the manual reset button(MRB) manually or operate the remote reset button(RES). Push the reset button on the OCR to reset the LED lamp and fault cause display relay contact (terminal 513~544) on the OCR.
  - Option AL, A1, A2, A3, A4 applicable

- For the auto reset type circuit breaker, it can be reset when the interlock is automatically released after a circuit breaker trip, and if the terminals R11, R22(dry contact) is set to Common, then the LED lamp and fault cause display relay contact(terminal 513~544) on the OCR are remotely reset.
  - Option A5, A6, A7, A8, A9 applicable

- One(AL1, 1b) or two(AL1, AL2, 1b) electrical trip alarm(AL) switches are provided as an option according to the order specifications.

- The AL2 and RES cannot be simultaneously used, so select only one option.

1. Electrical characteristics of trip alarm contact

Rated voltage (V)	Non-inductive load (A)		Inductive load (A)		Inrush current
	Resistive load	lamp load	Inductive load (A)	Motor load	
8V DC	11	3	6	3	Max. 24A
30V DC	10	3	6	3	
125V DC	0.6	0.1	0.6	0.1	
250V DC	0.3	0.05	0.3	0.05	
250V AC	11	1.5	6	2	

Manual Reset Button [MRB]

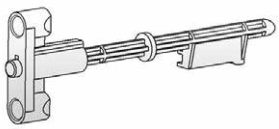

- It is a function which resets a circuit breaker manually when a circuit breaker is tripped by OCR.
- When a circuit breaker tripped by fault current, a mechanical trip indicator (MRB, Manual Reset Button) pops out from the front cover and the switch (AL) which sends control signal electrically is conducted to output the information occurred from fault circuit breaker.
- MRB can be operated only by OCR but not by OFF operation of circuit breaker. To re-close a circuit breaker after a trip, press MRB to reset it for closing.

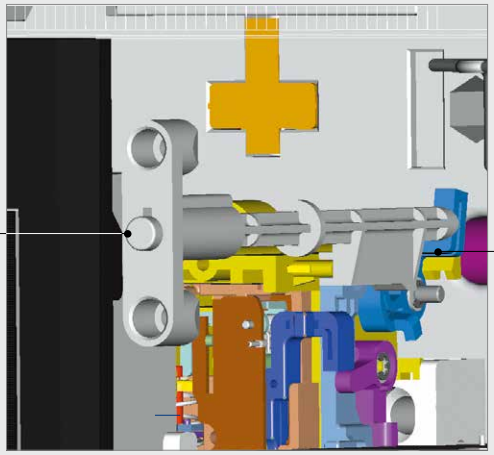

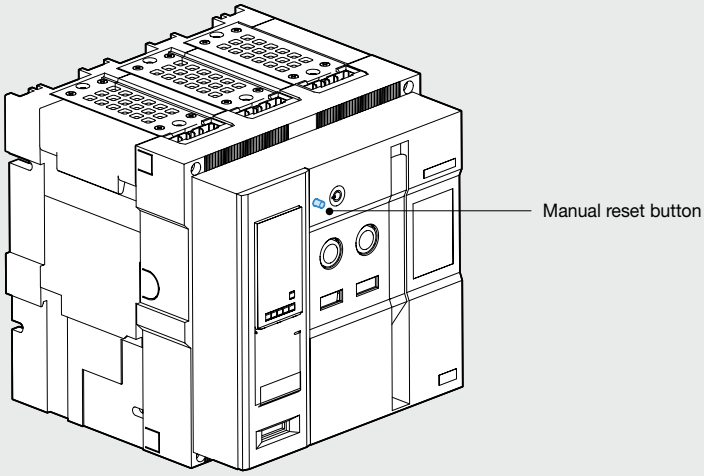

Note) The manual reset button is protruded in the event of trip.

Remote Reset Switch [RES]

- Following tripping, this function resets the "fault trip" alarm contacts (AL) and the mechanical indicator (MRB) and enables circuit breaker closing.
  Push button switch : AC 125V 10A, AC 250V 6A, DC 110V 2.2A, DC 220V 1.1A Resistive load
- In case of auto reset type circuit breaker
  Following tripping, a reset of Manual Reset Button(MRB) or Remote Reset Switch (RES) is no longer required to enable circuit breaker closing.
  The mechanical indicator (MRB) and electrical indicator (AL) remain in fault position until the reset button is pressed.
- AL2 and RES are alternative.

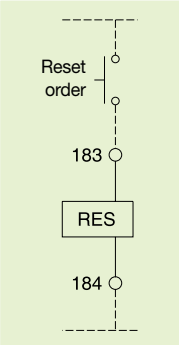

Wiring diagram

1. Rated voltage and rated current of RES

Rated voltage	Operating current (Max)		Operating time	Wire spec.
AC 110~130V	AC	6A	Less 40ms	#14 AWG (2.08 mm²)
AC / DC 110~125V	DC	5A		
AC / DC 200~250V	AC / DC	3A		#16 AWG (1.31 mm²)

2. Appearance

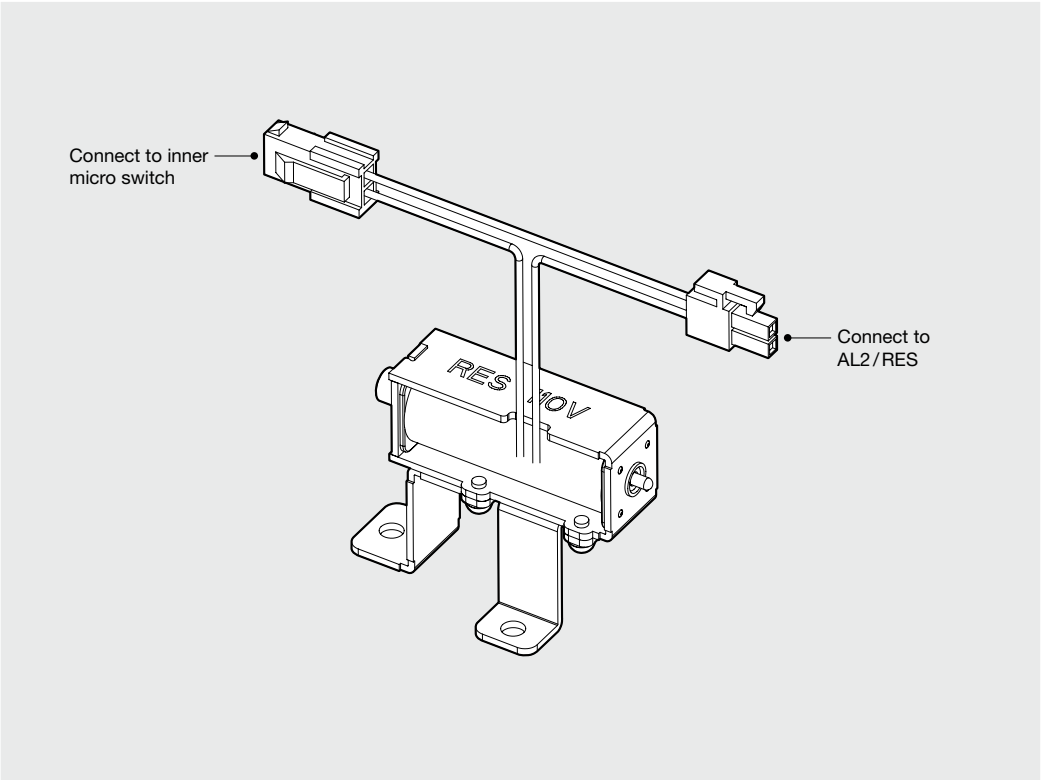

Accessories

Ready to Close Switch [RCS]

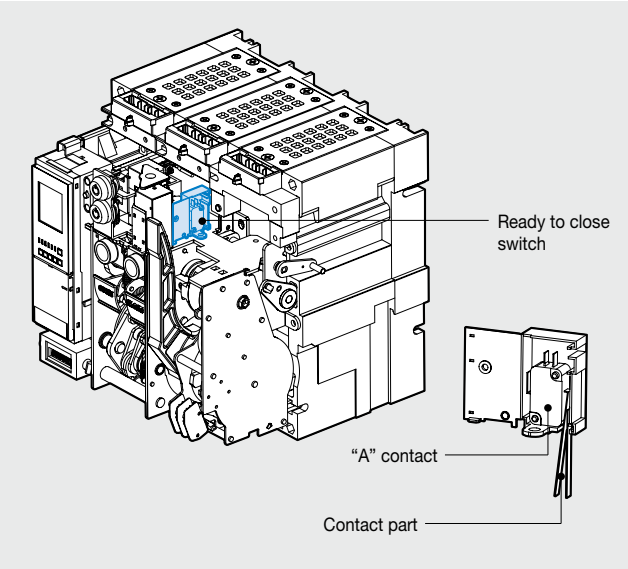

- It interlocks with mechanism of circuit breaker.
- It indicates the status that the circuit breaker is ready to do closing operation.
- When mechanism is in OFF position or in Charge, contact is output with "ON" and it indicates that mechanism can be closed.

Classification	Standard		Remark
Contactor Capacity	250/125 Vac	10 A	
	250 Vdc	0.3 A	
	125 Vdc	0.6 A	
	48 Vdc	3 A	
	24 Vdc	5 A	

Counter [C]

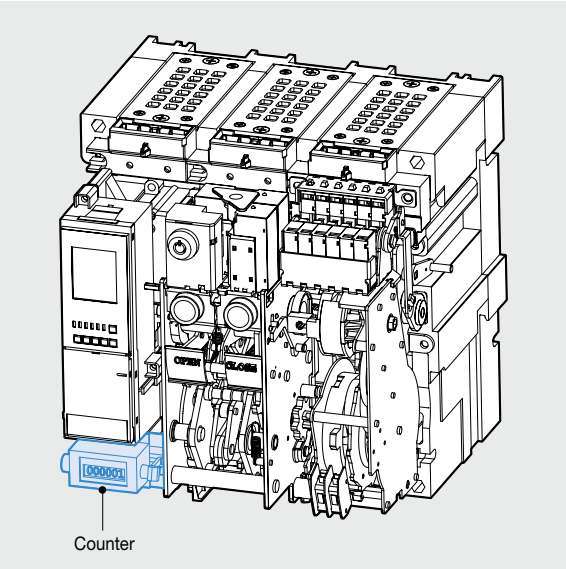

- It displays the total number of ON/OFF operation of ACB.

Auxiliary Switch [GX]

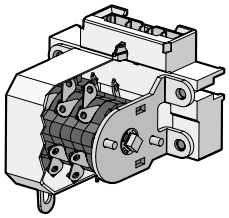

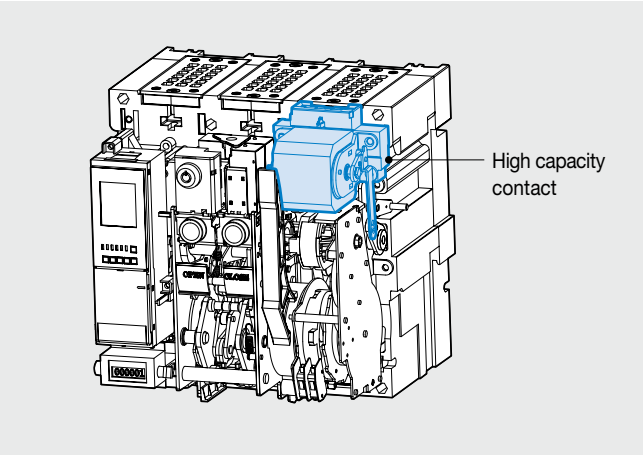

- It is a contact used to monitor ON / OFF position of ACB from remote place.

AUX. contact & charging types	
HX HC	High capacity OFF Charge 5a5b High capacity ON Charge 5a5b
JC	High capacity ON Charge 6a6b
GX GC	High capacity OFF Charge 3a3b High capacity ON Charge 3a3b

High capacity classification

High capacity	
2000AF	4000, 6300AF

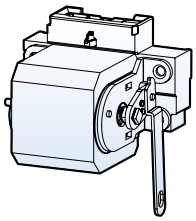

Classification			High capacity		Remark
			Resistive load	Inductive load	
Minimum current			DC5V, 1mA		
Contact capacity	AC	490V	5A	2.5A	
		250V	10A	10A	
		125V	10A	10A	
	DC	250V	3A	1.5A	
		125V	10A	6A	
		30V	10A	10A	
No. of Contact that can be used		HX	5a5b	-	Standard charging type
		GX	3a3b	-	
		HC	5a5b	-	Rapid auto-reclosing charging type
		JC	6a6b	-	
		GC	3a3b	-	

Key Lock [K1]

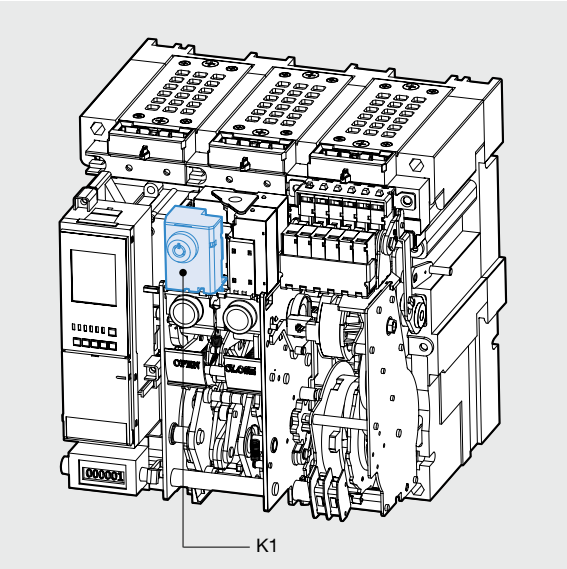

- It is a device for locking which prevents a certain circuit breaker from being operated by user's discretion when two or more circuit breakers are used at the same time.
- K1: Preventing mechanical closing

Key Interlock Set [K2]

Wiring

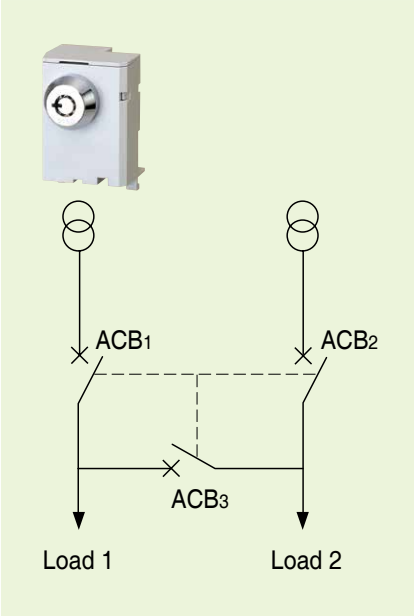

- 3 circuit breakers can be arranged for the continuous power supply to the load side and be interlocked mutually by using Key Lock embedded in each circuit breaker.

ACB-1	ACB-2	ACB-3	Status	
			LOAD1	LOAD2
●	●	●	OFF	OFF
●	○	○	OFF	ON
○	●	○	ON	OFF
○	○	●	ON	ON
●	●	○	OFF	OFF
●	○	●	OFF	ON
○	●	●	ON	OFF

○ : Release ● : Lock

Double Key Lock [K3]

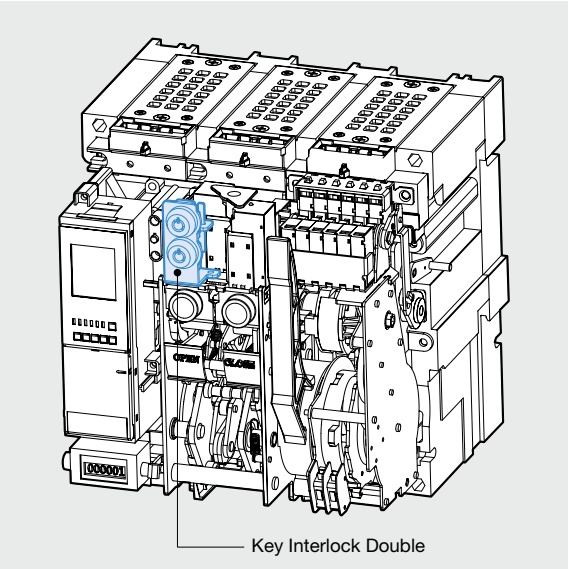

- When only two keys are released at the same time, circuit breakers operate. Handling method is same as K1.

ON/OFF Button lock [B]

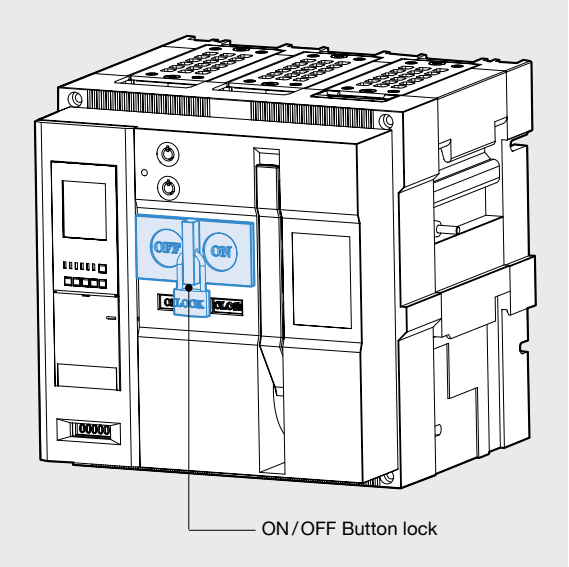

- It is to prevent manual operation of ACB's closing/tripping button due to user's wrong handling.
- It is not possible to handle ON/OFF operation under the "Button lock" status.

Note) Padlocks(Ø5 ~ Ø6) are not supplied.

Accessories

Lifting Hook [LH]

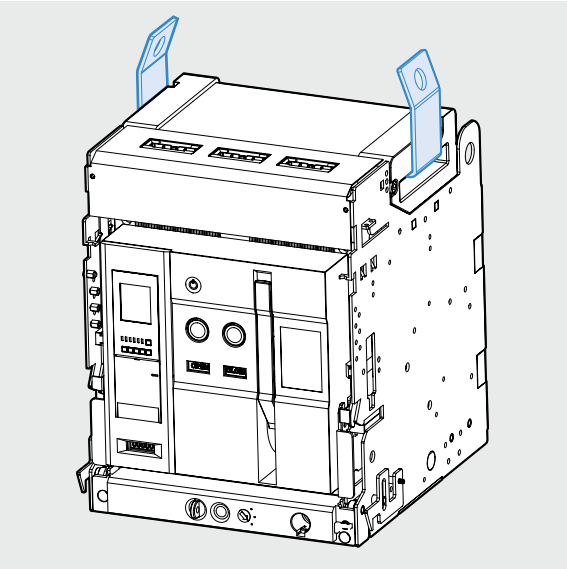

- It is a device to make an ACB easy to shift.
- Please hang it to both handles of the arc cover.

Condenser Trip Device [CTD]

- It gets a circuit breaker tripped electrically within regular time when control power supply is broken down and is used with Shunt coil, SHT. In case there is no DC power, It can be used as the rectifier which supplies DC power to a circuit breaker by rectifying AC power.

Ratings

Ratings	Specification	
Model	CTD-100	CTD-200
Rated input voltage (V)	AC 100 / 110	AC 200 / 220
Frequency (Hz)	50 / 60	50 / 60
Rated charge voltage (V)	140 / 155	280 / 310
Charging time	Within 5s	Within 5s
Trip possible time	Over 3 min	Over 2 min
Range of Input voltage (%)	85~110	85~111
Condenser capacity	400μF	160μF

External dimension

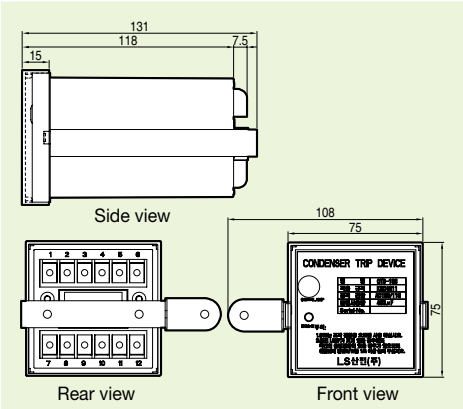

Circuit diagram

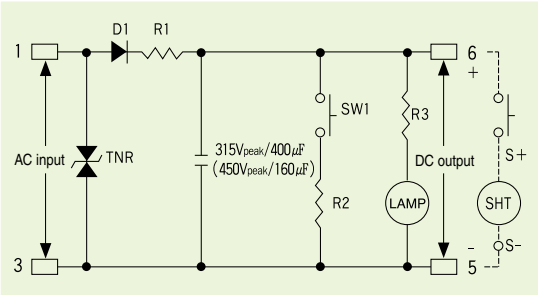

OCR Tester [OT]

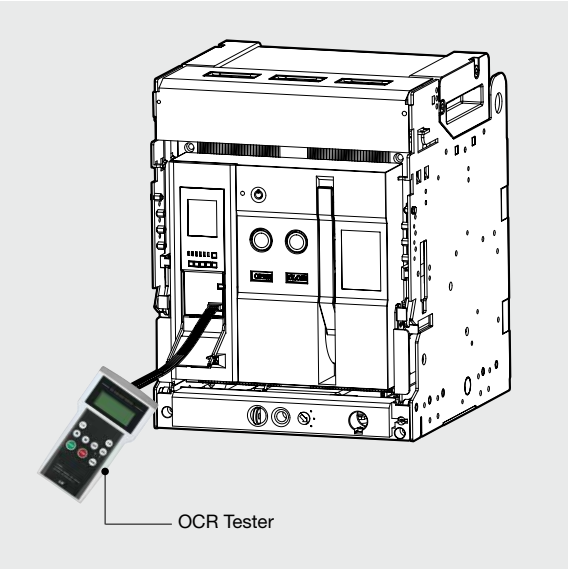

- It is a device which can test for the operation of Trip Relay under no power condition.
- It is available to test for long time delay / short time delay / instantaneous / ground fault.
- OCR setting information can be checked.

Configuration

I_A I_B	Power current / Load current
▲ ▼	Increase and decrease test current magnitude
ENT	Signal input and setup complete
Info	OCR settings information
START STOP	Generate and stop test current
MODE	Test reference current change
In Ir	Test standard current indicator LED

Accessories

Dust Cover [DC]

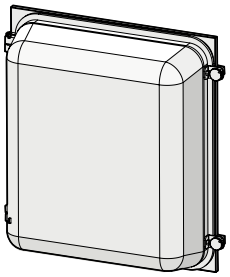

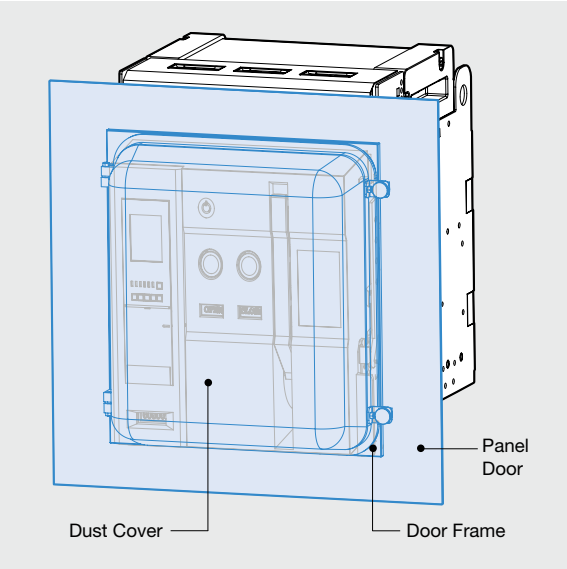

- Attach to the door frame.
- It protects the product dust and moisture that may affect the operation of the instrument at the same time (IP54) which may cause fault operation and enhances the sealing degree by being mounted to protrude type of panel.
- It is transparent so that the front side of ACB is visible and the Cover can be opened/closed even if ACB is drawn out to until TEST position.

Shorting "b" Contact [SBC]

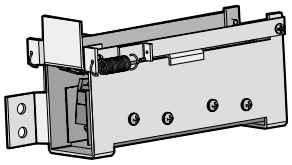

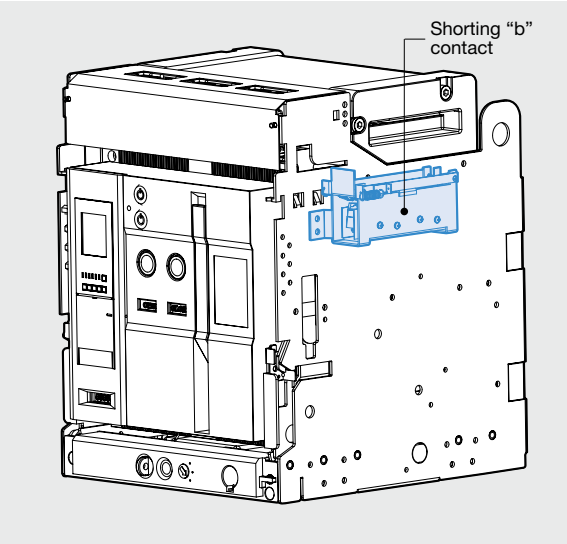

- It is the contact which keeps the external control circuit in normal by Aux. contact which disconnects "Axb" when ACB is moved from CONNECTED position to TEST position. The number of "shorting b-contact" corresponds to the number of "Axb" (4b)

Contact condition (Link between Axb and shorting "b" contact)

ACB position \ ACB condition	Close position [Auxiliary contact(Axb):OFF]	Open position [Auxiliary contact(Axb):ON]
Connected position (Shorting b contact : OFF)	OFF	ON
Test position (Shorting b contact : ON)	OFF	ON

Mechanical Operated Cell Switch [MOC]

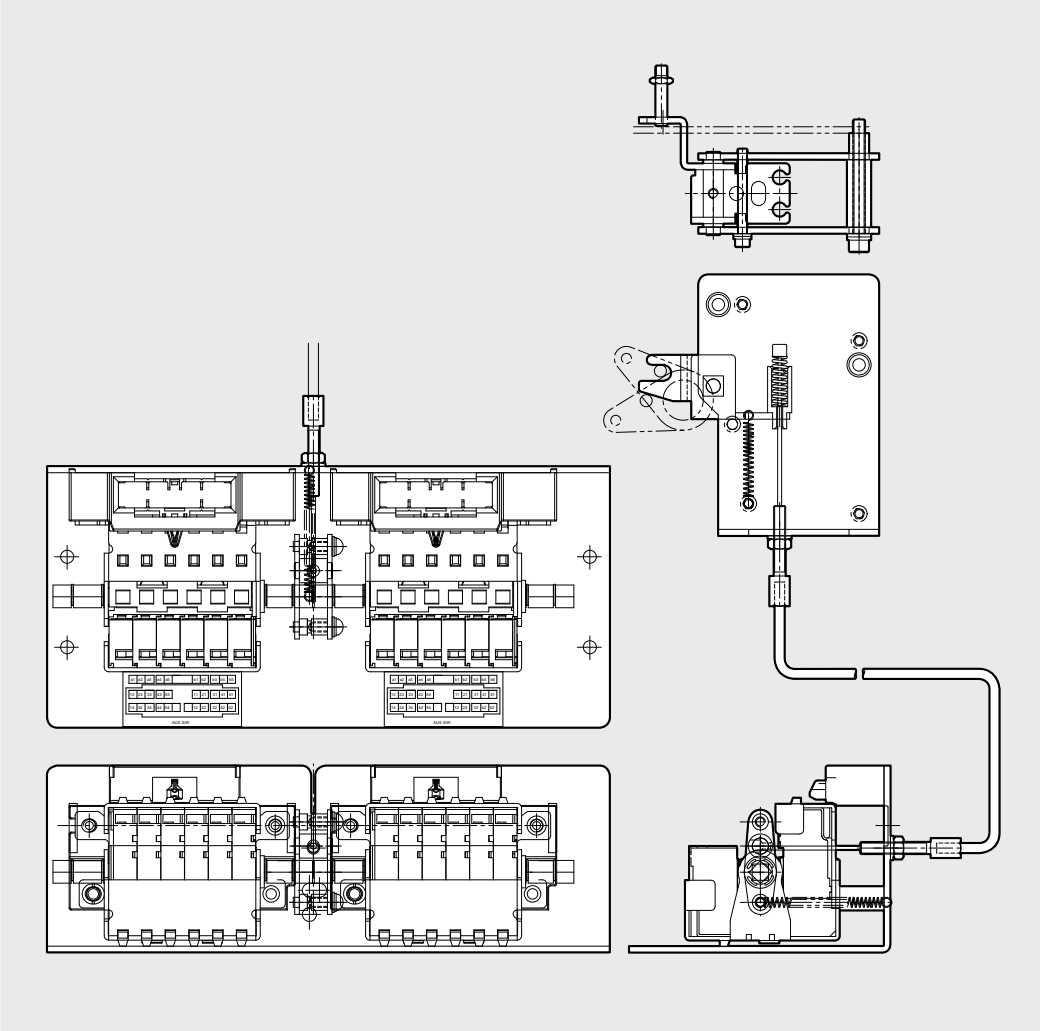

- It is the contact (10a10b) which displays the ON/OFF condition of ACB.
  It mechanically operates only when the breaker is "CONNECTED" position.
  A standard type and a high capacity type is available.
- The contact capacity is as same as the ratings of aux. contacts.
- When MOC link is installed to cradle, MOC can be equipped with the inside of panel.

Accessories

Mechanical Interlock [MI]

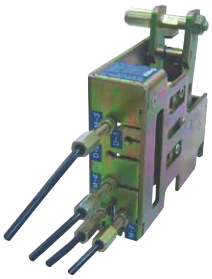

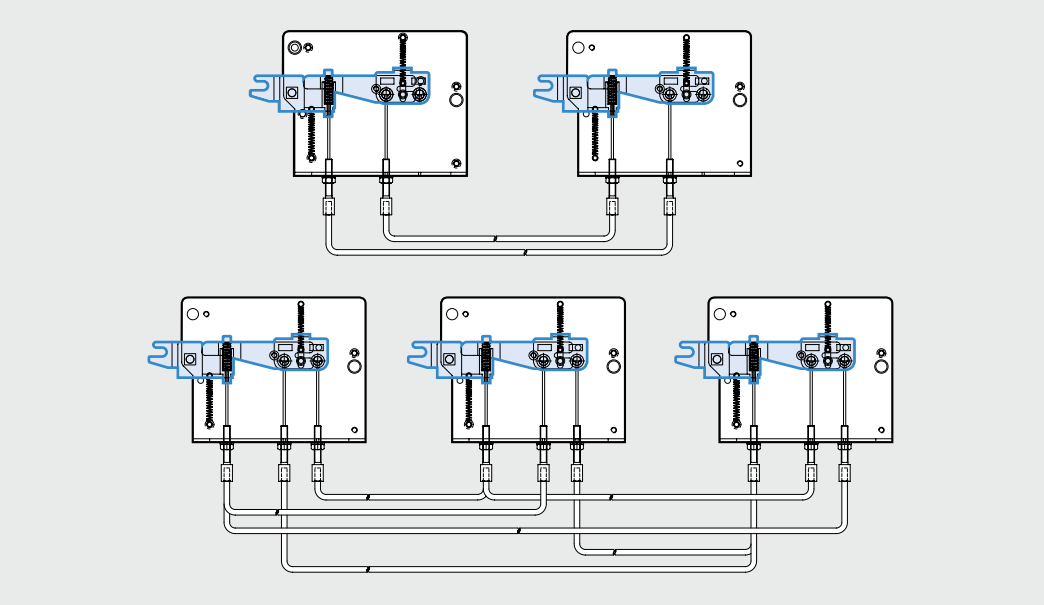

- It is used to interlock closing and trip between two or three breakers mechanically so as to prevent unintended operation at the same time.
- Wire type interlock can be applied upto 3 breakers

Safety Shutter [ST]

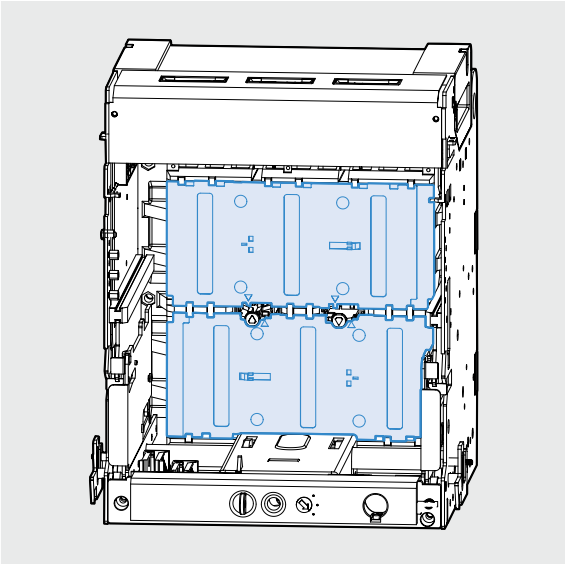

- It is the automatic safety device to protect the connectors of main circuit by cutting off dangerous contact from outside while the breaker is drawn out. When the ACB is drawn in, the shutter is automatically opened.
- There are 2 types of Safety Shutter and they are divided as shown in figure below.

The types of safety shutter plate
4000AF, 3P
4000AF, 4P

Safety Shutter Lock [STL]

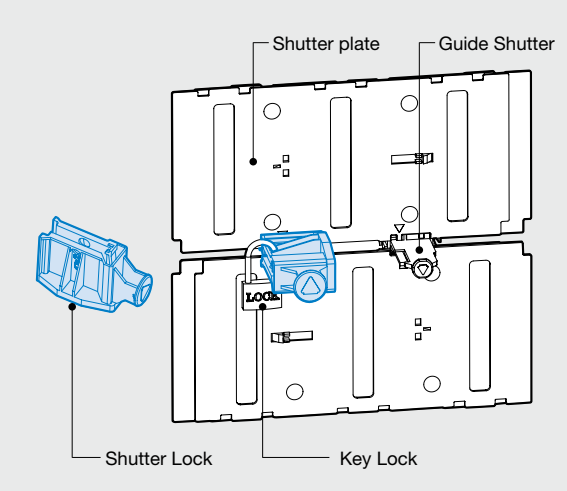

- It is a locking device which prevents safety shutter from being opened when it is closed.
  → If shutter lock is connected with guide shutter, the guide shutter can not be pushed structurally.
  Thus, it is not available to open the safety shutter.

Note) Padlocks (Ø5 ~ Ø6) are not supplied.

Door Frame [DF]

Fixed type

Draw-out type

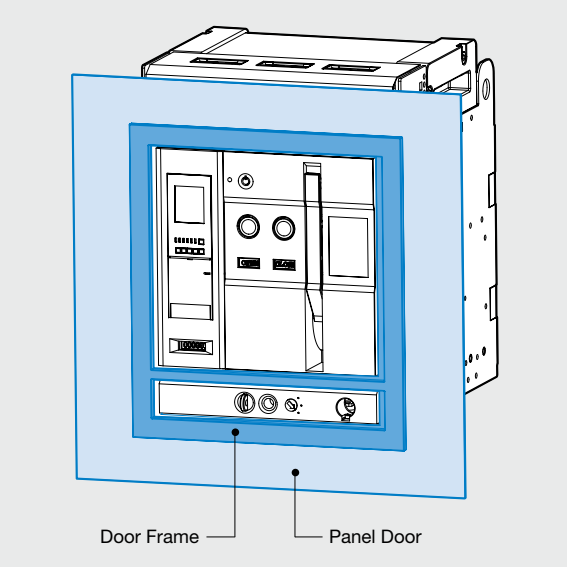

- When structuring the embedded type of ACB panel, it protects the protrude front of ACB and the cutting side of panel door by attaching it to the panel door.

Interphase Barrier [IB]

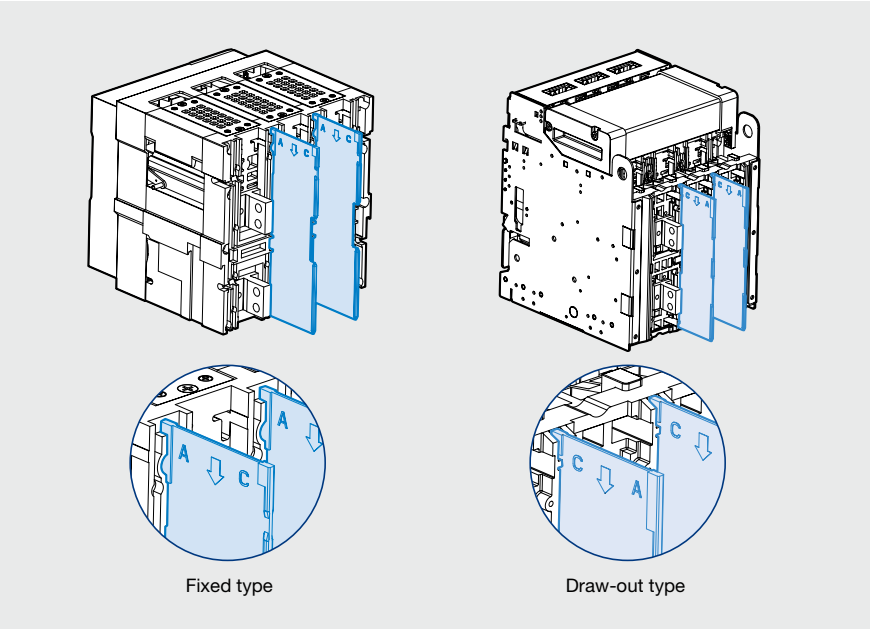

- Interphase barrier prevents the arc which may arise and result in short-circuit between phases in advance
- As “C” stands for “CRADLE”, install the Interphase barrier in the direction of “C” in case of Draw-out type.
- As “A” stands for “ACB main frame”, install the Interphase barrier in the direction of “A” in case of Fixed type.

※ Short busbar mounting the barrier method, combined products

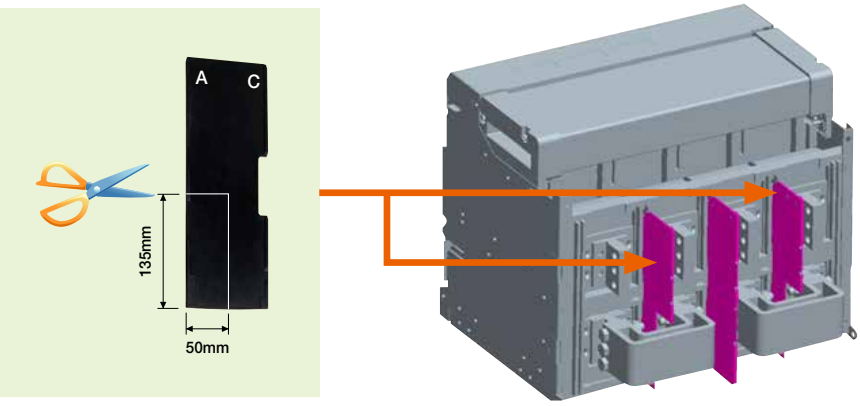

Cell Switch [CEL]

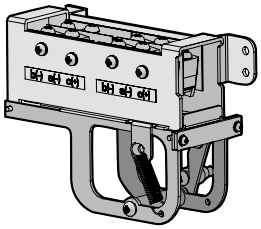

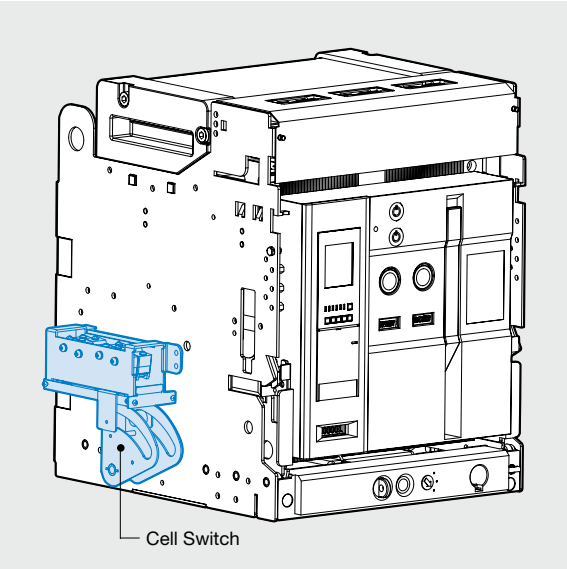

- It is a contact which indicates the present position of ACB. (CONNECTED, TEST, DISCONNECTED)

<Contact configuration>
4C: 1Disconnected +1Test +2Connected
8C: 2Disconnected +2Test +4Connected

※ Contact configuration can be changeable if necessary.

Operating characteristic

ACB position			DISCONNECTED		CONNECTED
Draw-in and draw-out position			DISCONNECTED	TEST	CONNECTED
Contact operation	CL–C (CONNECTED)		OFF		ON
	CL–T (TEST)		OFF		
	CL–D (DISCONNECTED)			OFF	
Contact capacity	Voltage (V)		Resistive load		Inductive load
	AC	460	5		2.5
		250	10		10
		125			
	DC	250	3		1.5
		125	10		10
		30	10		
Contact number			4C		

Terminal (4C, 8C)

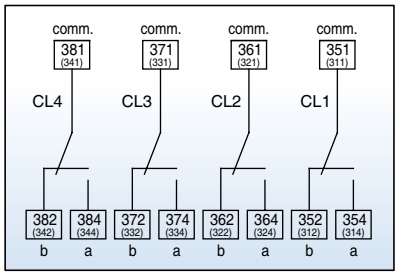

4C attached to the right side of crad

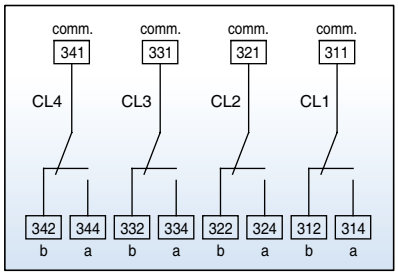

4C attached to the left side of cradle

Door Interlock [DI]

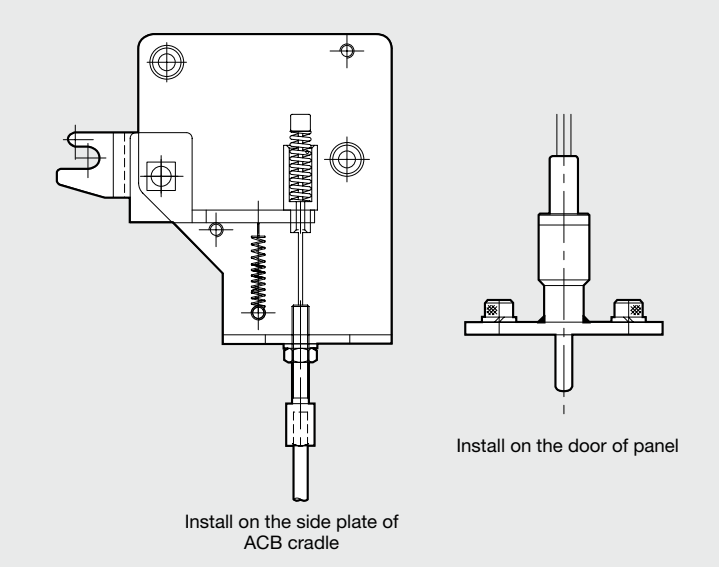

- It is a safety device which does not allow the panel door to open when a circuit breaker is in the “ON” position.

Zero Arc Space [ZAS]

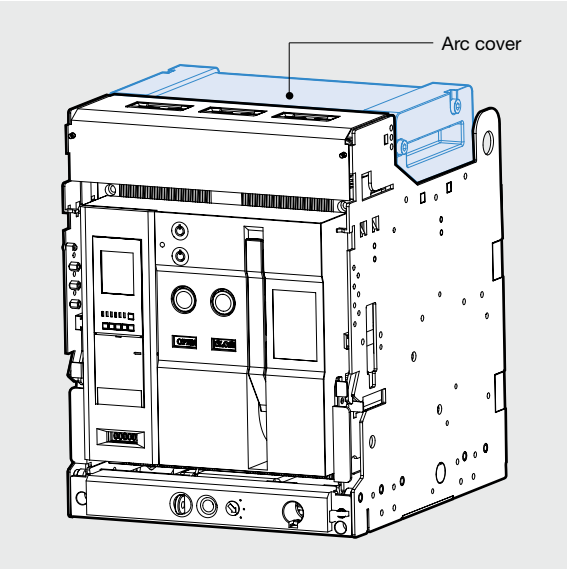

- Arc which may arise while breaking fault current is extinguished first by arc chute in main body of circuit breaker and then completely extinguished by arc cover.
  By preventing arc from exposing to the outside, it protects itself from all kinds of accidents.

- It is categorized into 2 types by ratings and poles

Ampere Frame	Cover Length (mm)
4000AF 3P	359.4
4000AF 4P	474.4

Safety control cover [SC]

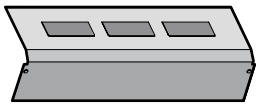

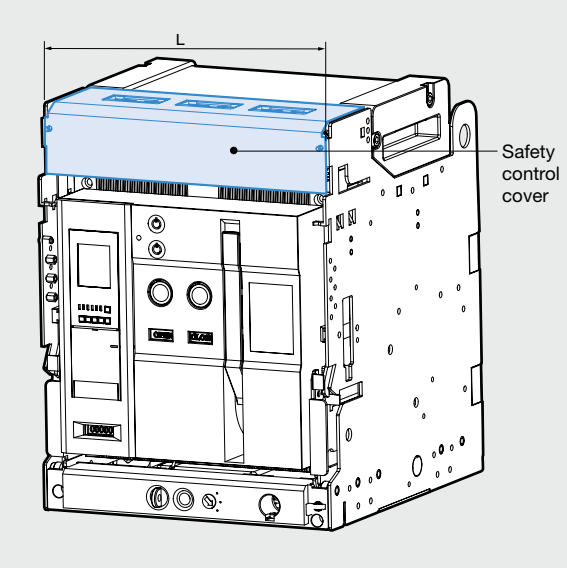

- It protects control terminals which exposes to the outside, and prevents the damages resulted from foreign substances.
- It is categorized into 2 types by ratings and poles.

Ampere Frame	Cover Length (mm)
4000AF 3P	412
4000AF 4P	527

Racking Interlock [RI]

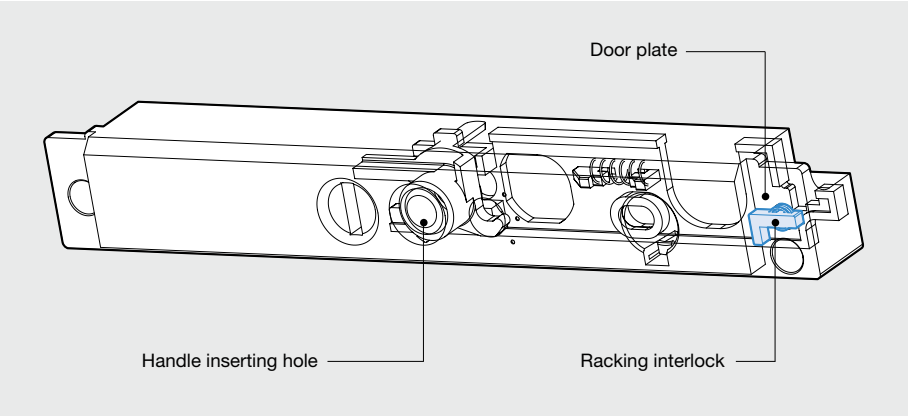

- When panel door is opened, Draw in/out handle doesn't be inserted. Thus, panel handle can be inserted only when panel door is closed.

Pad Lock / Position Lock [PL]

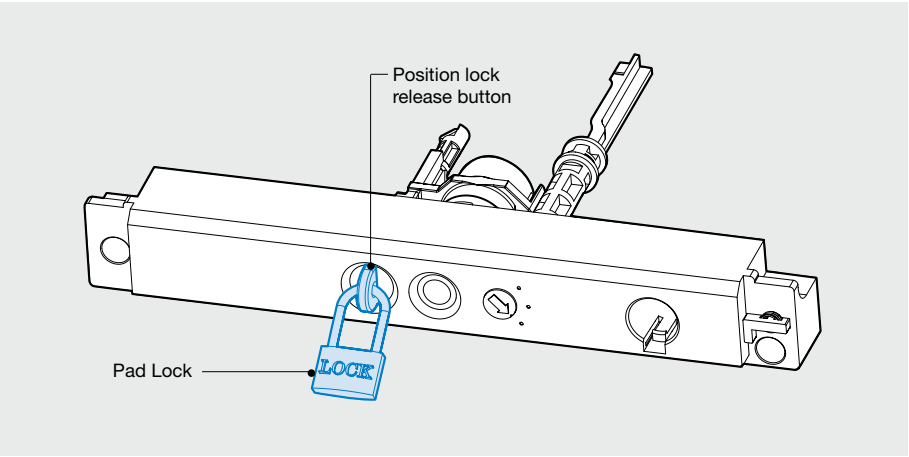

ACB is subject to restriction regarding moving in connected, test, disconnected when drawing in or out. If main body of ACB is placed in 3 positions, it is locked and stopped when drawing in or out.

- As shown in the figure, if draw-in/out button pops out, it means locking is operating.
- To continue Draw-in/out operation, release lock by pushing Draw-in/out button
- In case it is locked as shown in the figure above, main body of ACB can not be drawn in or out into the cradle.
- For the lock device, user has to purchase it. (Ø5 ~ Ø6)

Miss Insertion Prevent Device [MIP]

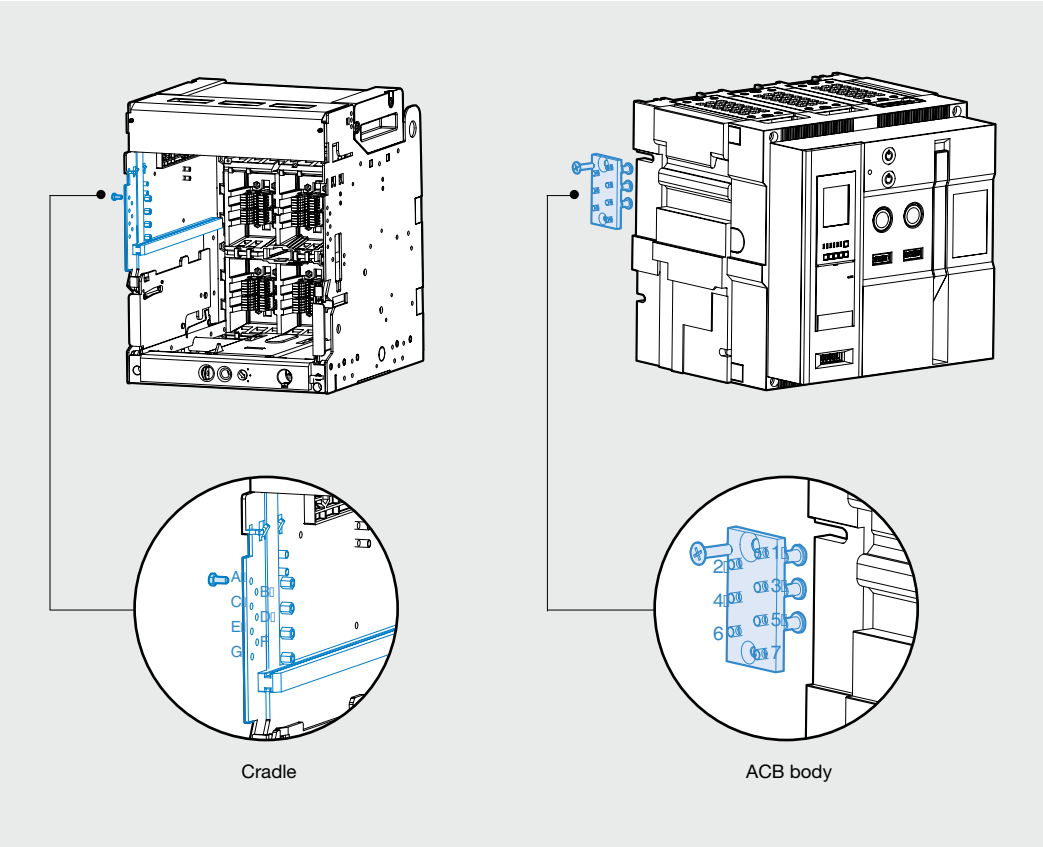

- When the main body of ACB is inserted to the cradle, if the ratings of ACB does not match with cradle, it mechanically prevents ACB from being inserted into cradle of ACB.
- The installation method is variable according to ratings.

Cradle	ACB	Cradle	ACB	Cradle	ACB	Cradle	ACB
ABCD	567	ADEF	237	ABEG	346	BCEG	146
ABCE	467	ADEG	236	ABFG	345	BDEF	137
ABCF	457	ADFG	235	ACDE	267	BDEG	136
ABCG	456	AEFG	234	ACDF	257	BDFG	135
ABDE	367	BCDE	167	ACDG	256	CDEF	127
ABDF	357	BCDF	157	ACEF	247	CDEG	126
ABDG	356	BCDG	156	ACEG	246	CEFG	124
ABEF	347	BCEF	147	ACFG	245	DEFG	123

UVT Time Delay Controller [UDC]

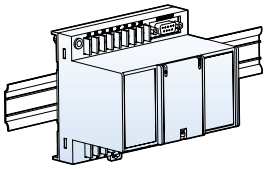

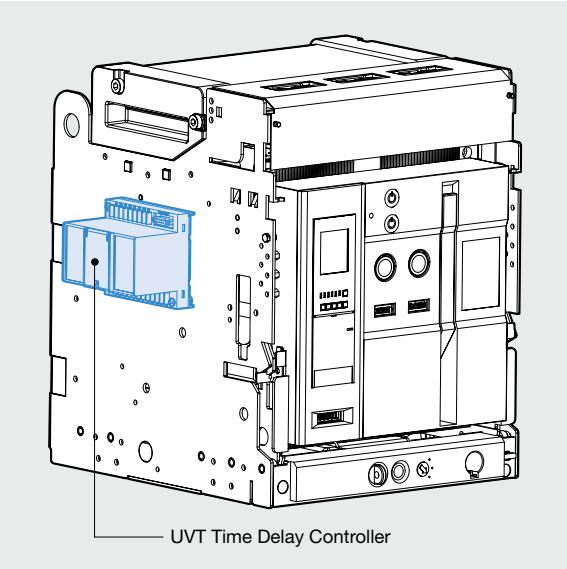

- UVT is a device which makes ACB tripped automatically to prevent the accident on load side due to under voltage or power breakdown.
  There are two types, Instantaneous type and time delay type.
- It can be installed on the rail or to the cradle.
- Instantaneous type: only available with UVT coil.
- Time delay type: available by connecting UVT coil and UVT time delay controller.
- Common use for the all types.

1. The rated voltage and characteristic of UVT time delay controller

Rated voltage (Vn)		Operating voltage range (V)		Power consumption (VA or W)		Trip time (s)
DC (V)	AC (V)	Pick up	Drop out	Inrush	Steady-state	
48~60	48	0.65~0.85 Vn	0.4~0.6 Vn	200	5	0.5, 1, 1.5, 3
100~130	100~130					
200~250	200~250					
–	380~480					

Note) Operating voltage range is the min. rated standard for each rated voltage (Vn).

2. Wiring

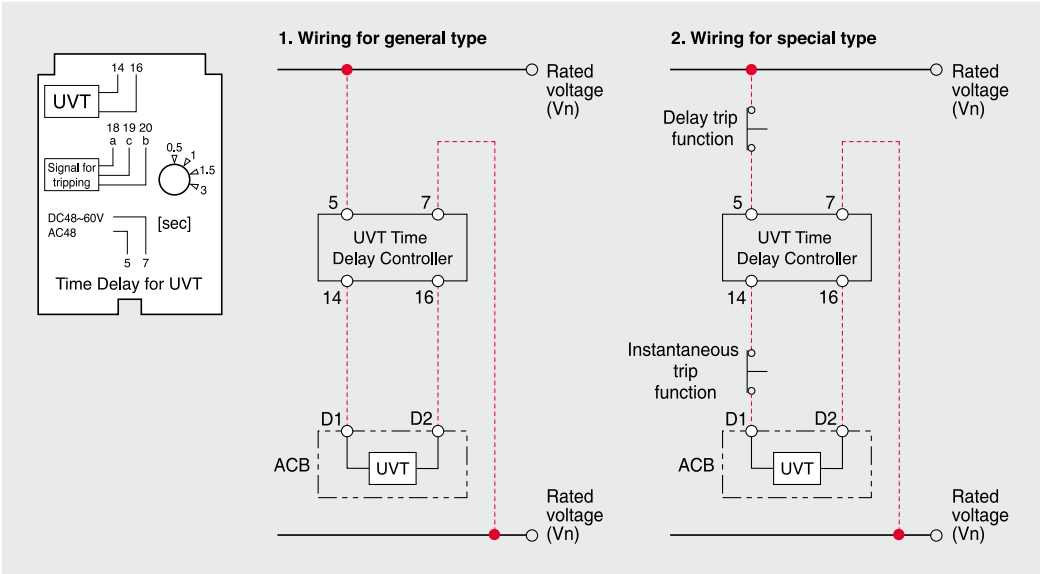

※ The wiring presented with red color should be set by uesers.

Temperature Alarm [TM]

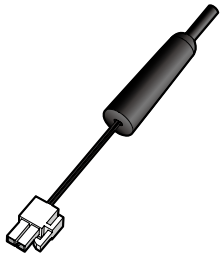

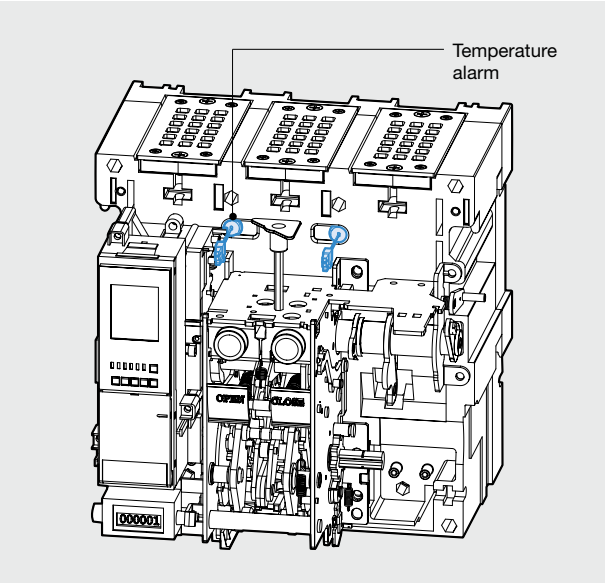

- Temperature Alarm Unit is a device to show the temperature through a sensor inside of ACB.
- The temperature sensor can be installed up to 2 and the output is connected to control terminal blocks.
- It displays the maximum temperature of them and transmits through a network.
- If the temperature is higher than a standard, an alarm can occur.
- Temperature alarm unit communicates with Modbus / RS-485 basically, Profibus-DP need to be purchased separately.
- Temperature alarm unit is installed on the cradle or the inside of panel.

Temperature alarm

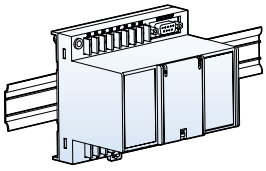

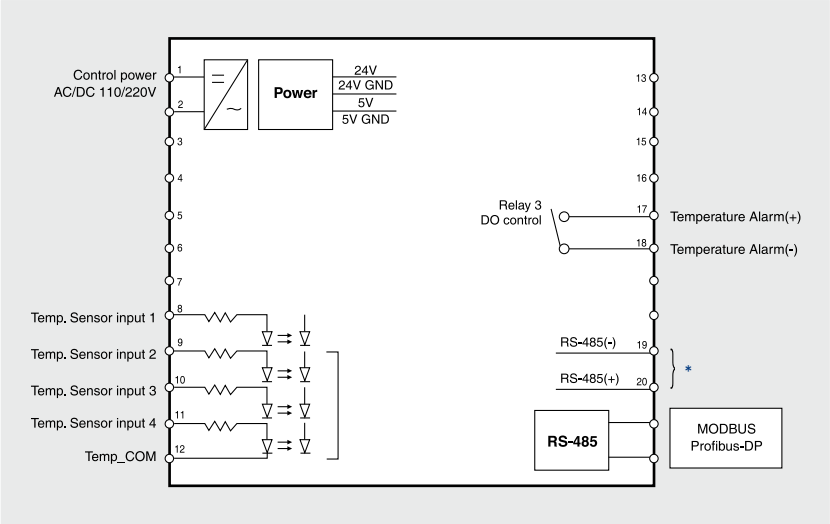

* In case of using Profibus-DP communication, it needs to communicate with ACB trip relay.

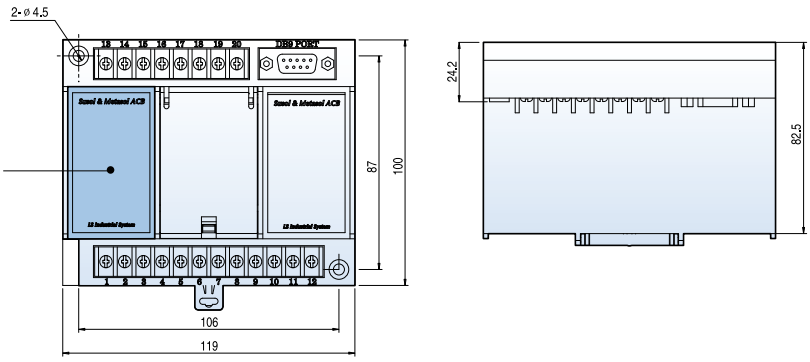

Remote I/O Unit [RCO]

Remote I/O Unit

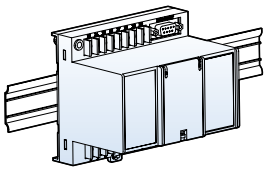

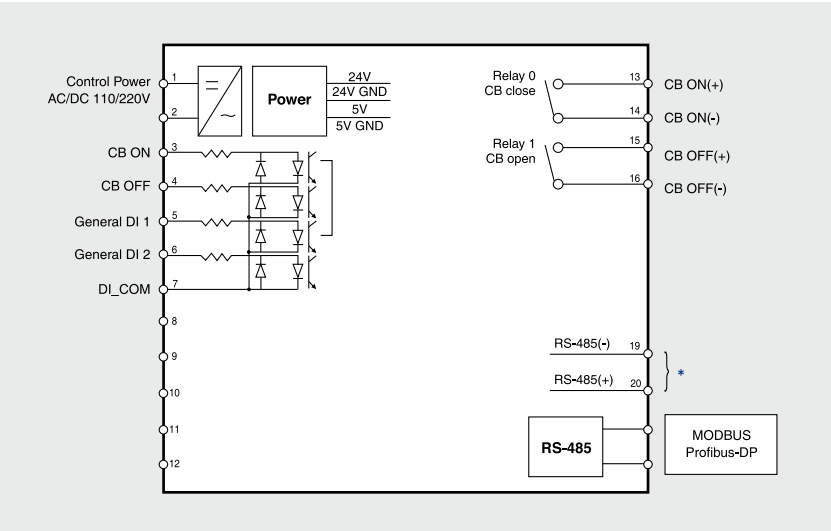

* In case of using Profibus-DP communication, it needs to communicate with ACB trip relay.

Classification		Applied range	Remarks
CB control	Contact switching capacity	AC230V 16A/DC30V 16A	
	Max. switching capacity	3680VA, 480W	
Alarm	Contact switching capacity	AC230V 6A/DC25V 6A	Induction load (cosØ=0.4, L/R=7ms)
	Max. switching capacity	1880VA, 150W	

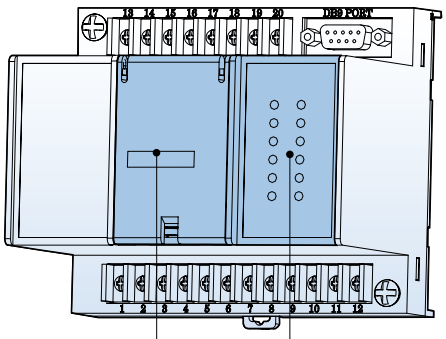

- Baud rate setting
- Comm. address setting
- Temperature setting

- Remote I/O unit has the I/O contact which can trip or close the ACB from the remote site by communication.
- For the General DO, the output of DI1 or DI2 is selectable.
- Remote I/O Unit communicates with Modbus / RS-485 communication basically, Profibus-DP need to be purchased separately.
- It supports SBO (Select Before Operation) function and guarantees the control reliability.
- Remote I/O Unit can be installed on the cradle of ACB or the inside of panel.

LED		Status
1	DI1	Indicates digital Input #1condition
2	DI2	Indicates digital Input #2condition
3	DO ON	Indicates temperature alarm output is ON
4	DO OFF	Indicates temperature alarm output is OFF
5	CB ON	Indicates circuit break close condition
6	CB OFF	Indicates circuit break open condition
7	RUN LED	Indicates unit run condition
8	CB ERROR	Indicates circuit break terminal Disconnection / control Err condition

Connection diagram of DC ACB

ADV	750V	1000V	1500V
ADH	500V	750V	1000V
DDV	500V	1000V	1500V
DDH	500V	750V	1200V

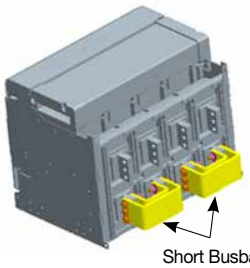

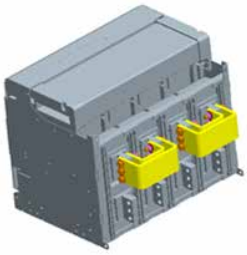

Upper supply

Lower supply

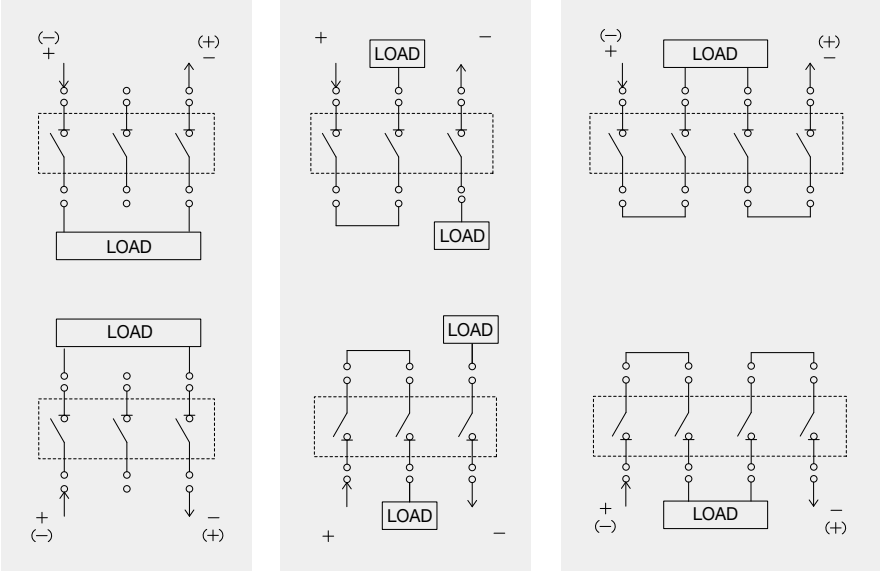

※ Refer to the following page for product dimensions with short busbar.
Note) please contact us if wiring other than the above circuit diagram is required.

Composition of short busbar

1. Short busbars can be ordered as shown in the table below, or customer have to make short busbars in accordance with the specified short busbars according to AF.
2. The tightening torque for assembling short busbars is 40~50N.m

Type	AF	Ordering code & quantity	Appearance	Contents (Based on 3P)
ADH **ADV**	1600AF	70223464603 3P : 1ea 4P : 2ea	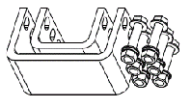	Short busbars : 75mm×10T×2ea Bolt : M12×60, 6ea Nut : M12, 6ea Spring washer, Plain washer
DDH **DDV**	800- 3200AF			
ADH **ADV**	2500AF	70223464604 3P : 1ea 4P : 2ea	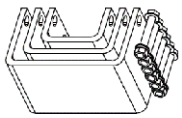	Short busbars : 125mm×10T×3ea Bolt : M12×80, 6ea Nut : M12, 6ea Spring washer, Plain washer
DDH **DDV**	4000AF			
ADV **ADH**	3200AF	70223464620 3P : 1ea 4P : 2ea	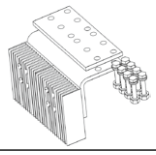	Short busbars : 100mm×10T×1ea 120mm×150mm×10T×1ea (L type) Bolt : M12×60, 8ea Nut : M12, 8ea Spring washer, Plain washer, Heat sink

Dimension (DC ACB)

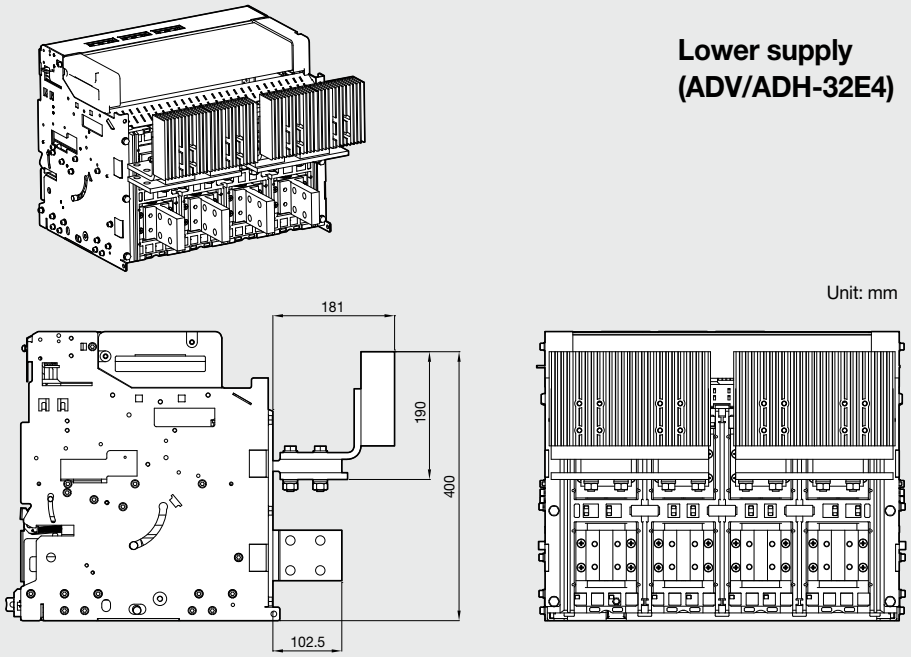

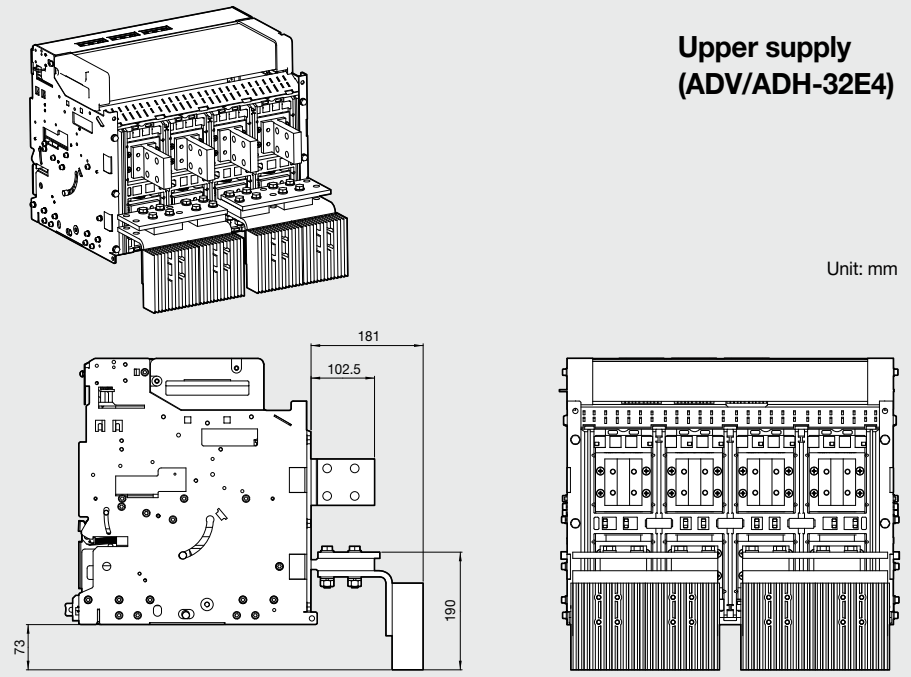

Dimension (DC ACB)

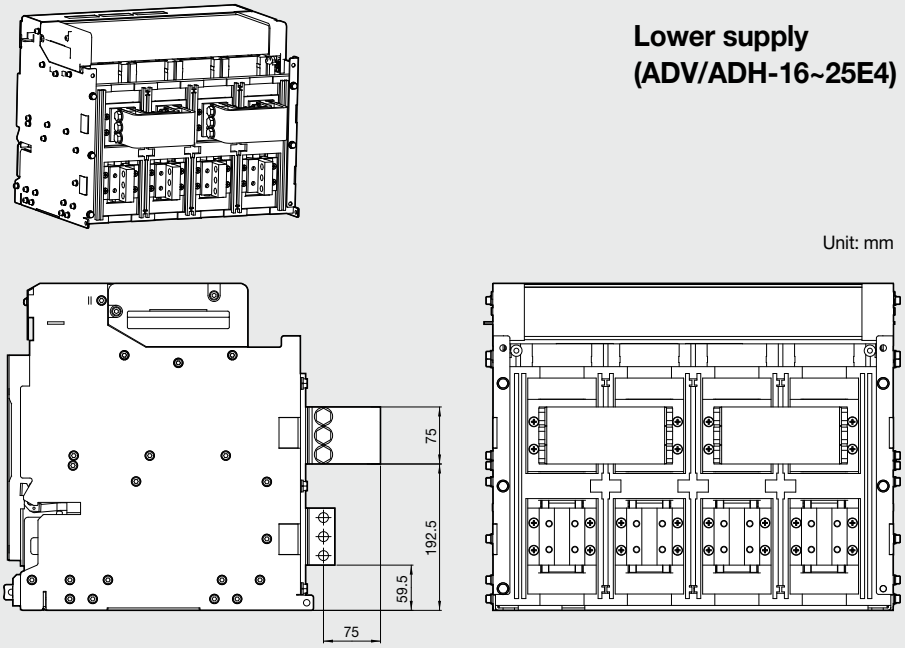

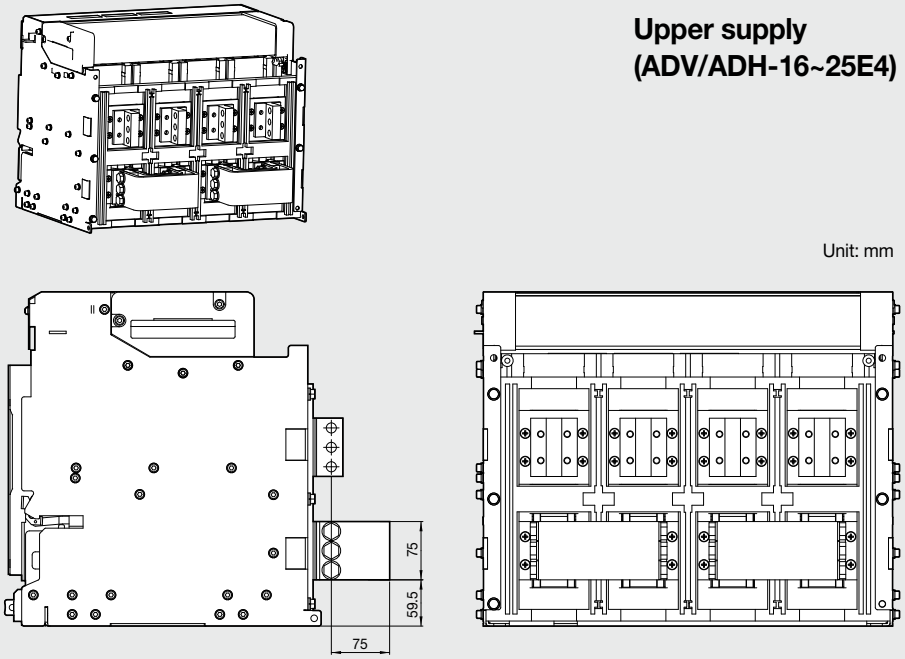

Busbar connection

Dimension (DC Switch-Disconnectors)

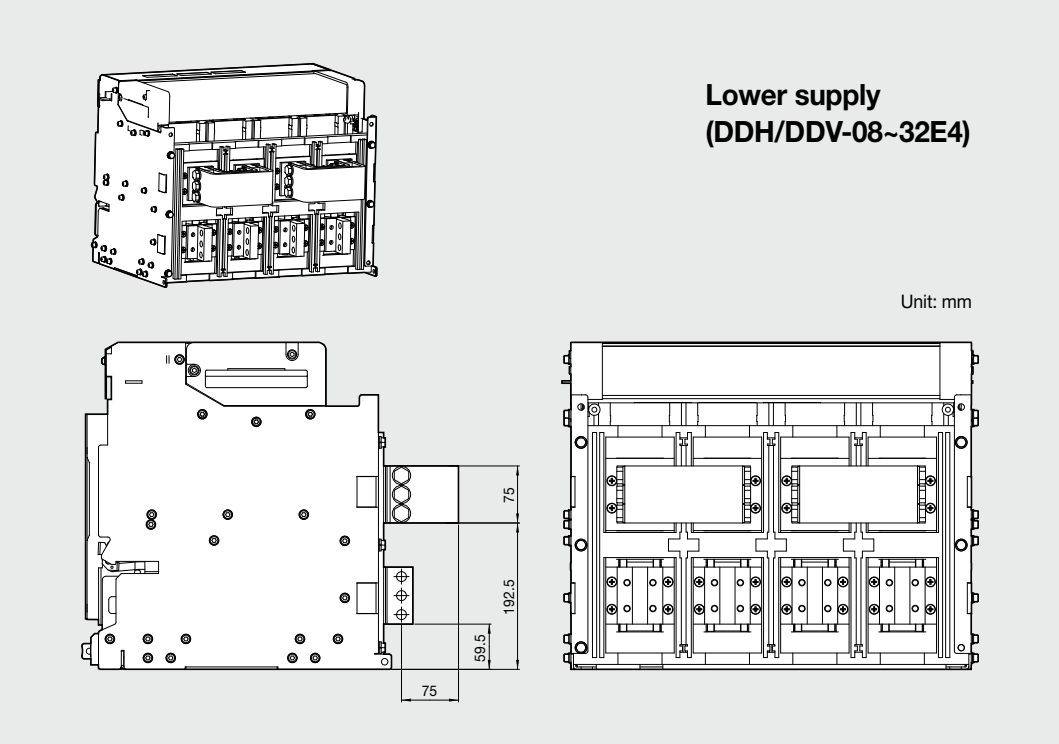

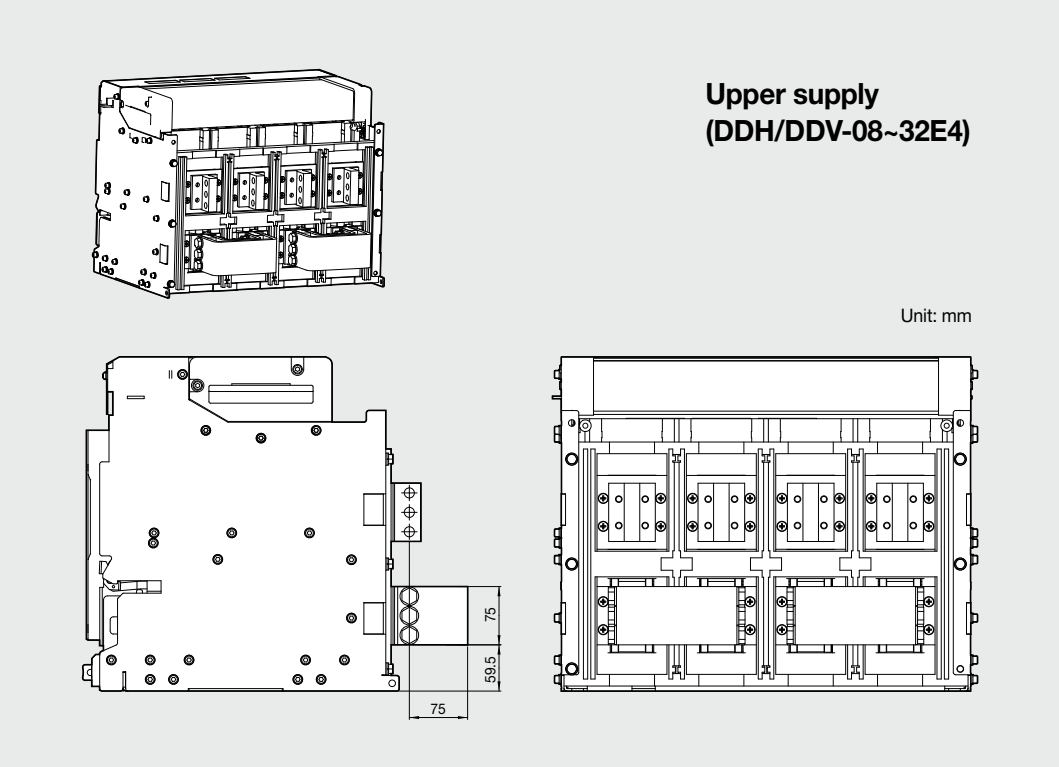

Dimension (DC Switch-Disconnectors)

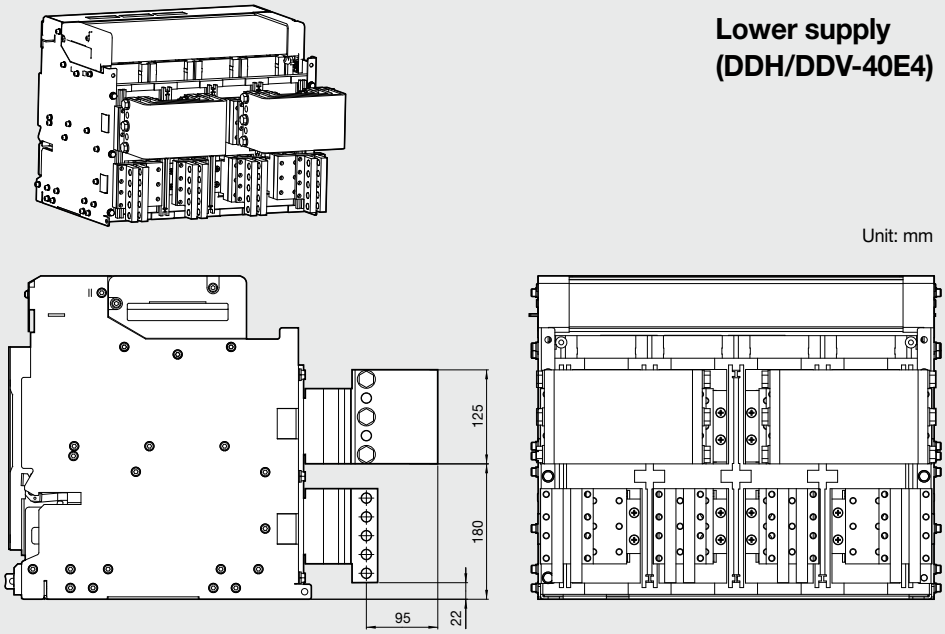

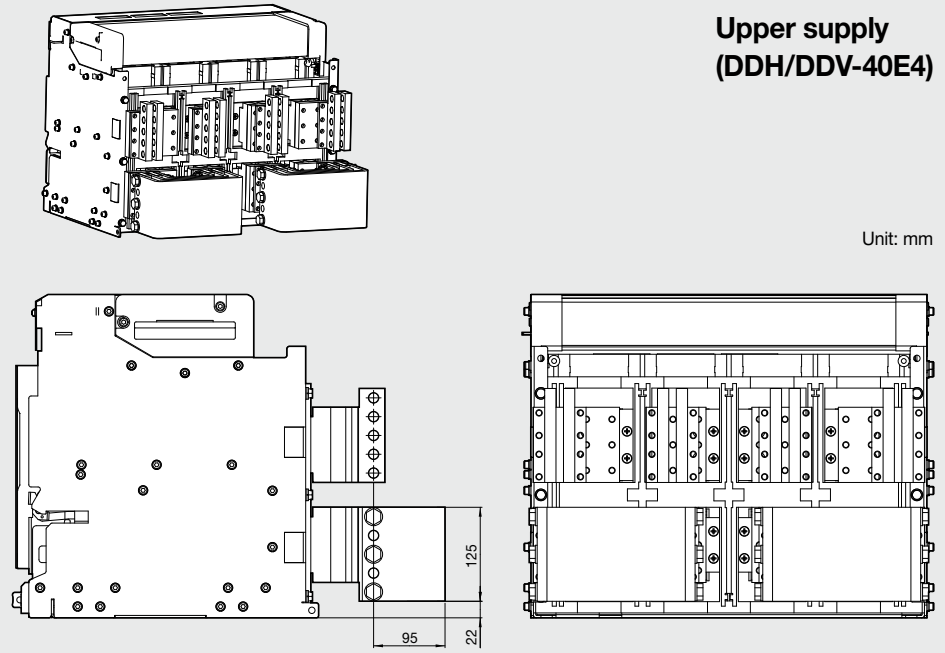

Control circuit diagram

DC ACB

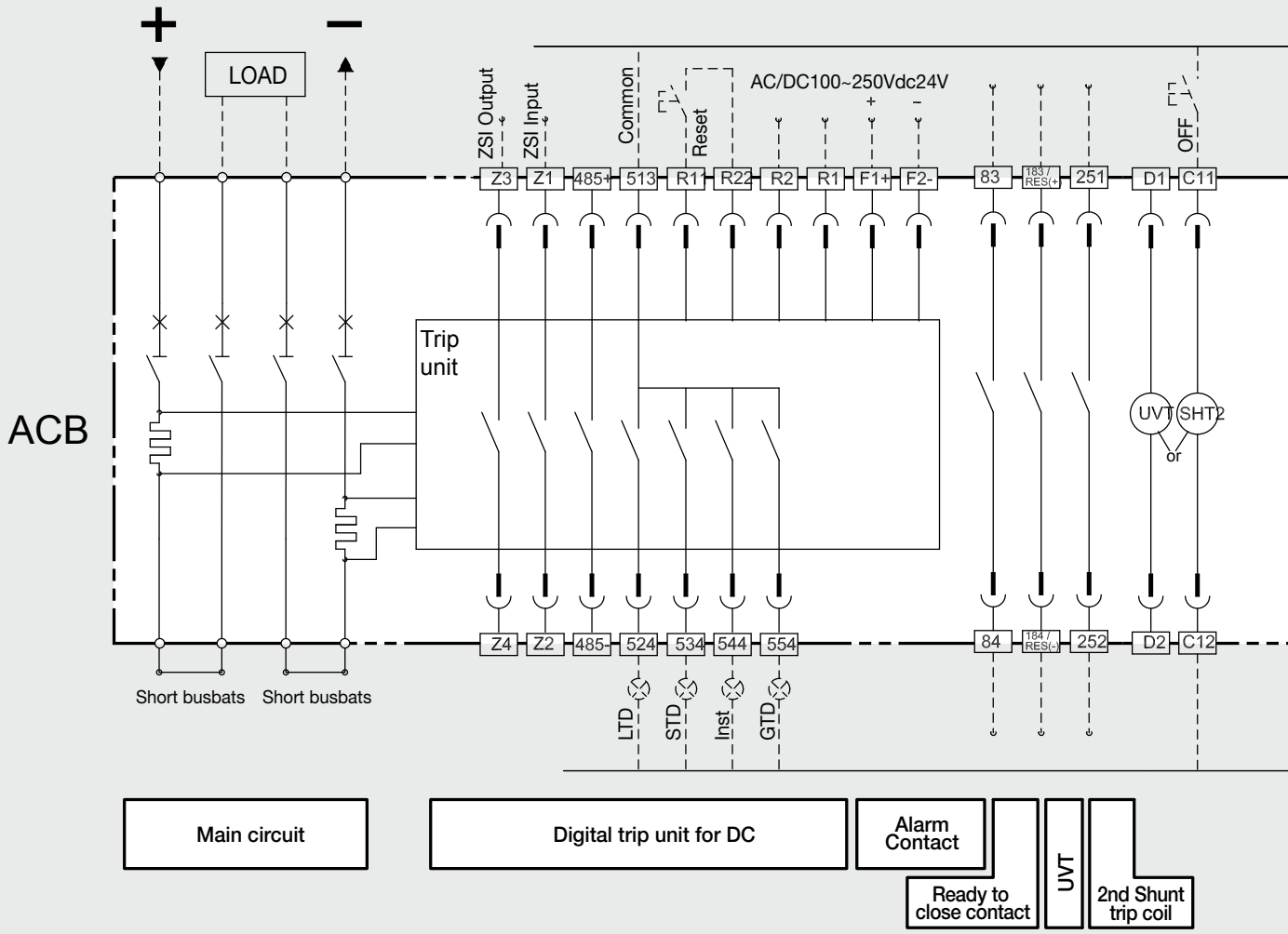

Terminal code description

13 14 ~ 63 64	Auxiliary switch "a"
11 12 ~ 61 62	Auxiliary switch "b"
413 414	Charge completion contact
423 424	Charge completion contact (Communication)
U1 U2	Motor charging
A1 A2	Closing coil
C1 C2	Shunt trip
C11 C12	2nd shunt trip
D1 D2	Terminal of UVT
251 252	Ready to close contact

R1 R2	Control power AC/DC100~250V for OCR
F1+ F2-	Control power DC24V for OCR
83 84	Alarm contact 1 (NO)
183 184	Alarm contact 2 (NO)
513 ~ 514	Alarm contact 1 (Trip cause)
R11 R22	Alarm reset
485+ 485-	RS-485 Communication
Z1 Z2	ZSI input
Z3 Z4	ZSI output
TC1 TC2 ~ T1 T2	Temperature module

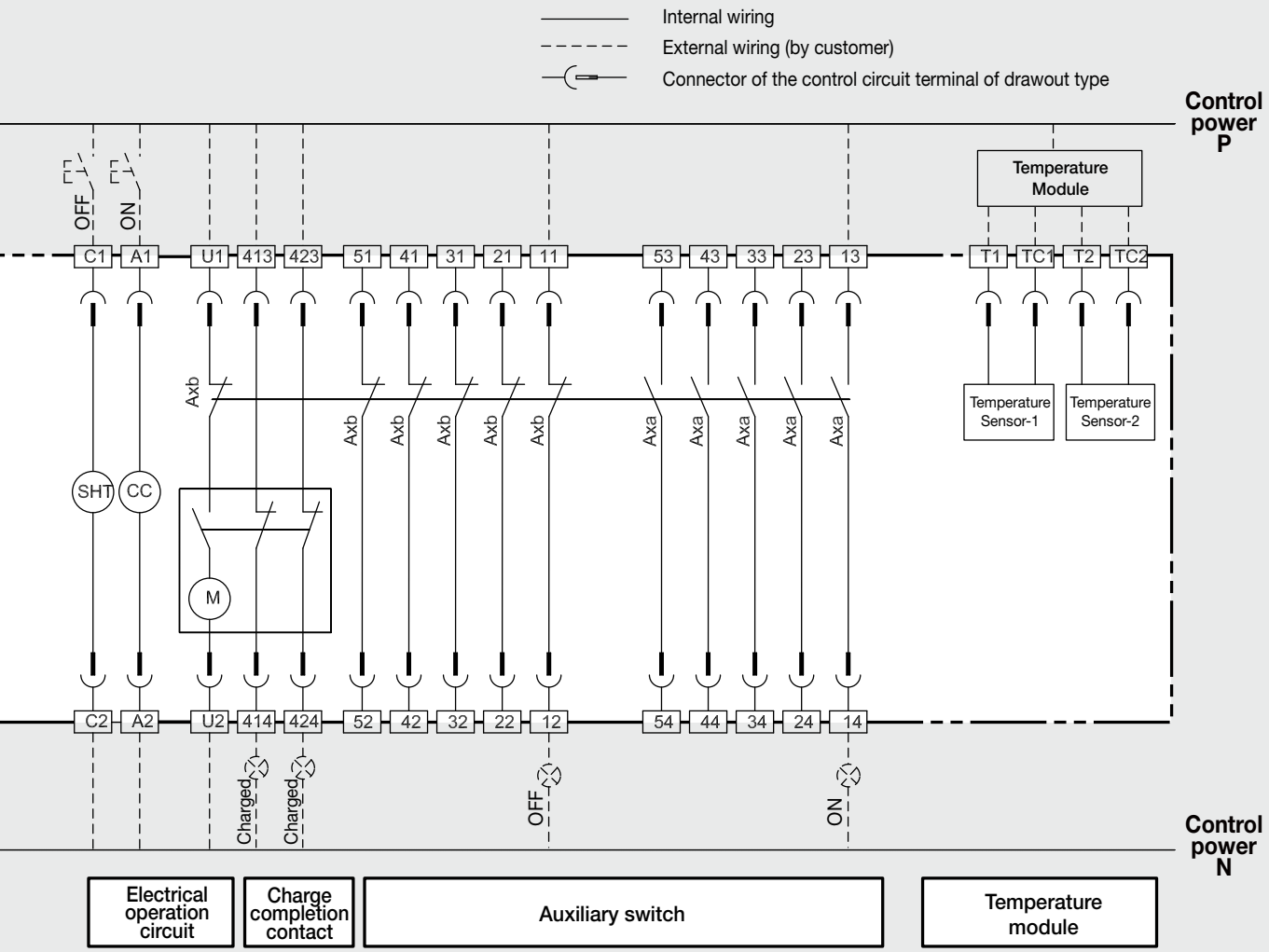

Accessory code description

Axa, Axb	Auxiliary switch
(M)	Charging motor
(CC)	Closing coil
(SHT1)	Shunt trip coil
(SHT2)	2nd shunt trip coil
(UVT)	UVT coil
LTD	Long time delay trip indicator
STD	Short time delay trip indicator
Inst	Instantaneous trip indicator
GTD	Grount fault trip indicator

Note) 1. The diagram is shown with circuit de-energized, all devices open, connected and charged and relays in normal position
2. Relay is normal condition and charging type is "Off-Charging"
3. The standard of auxiliary contact is 3a3b
4. Option
- Ready to close contact, Trip alarm contact, UVT coil, charge completion contact
- Secondary trip coil, Cell switch, Temperature module, Remote close-open module
5. Please consult us for the use of ZSI (Zone selective Interlocking)
6. Refer to catalog for the connection of UVT.
7. For connecting RS-485 and DC 24V verify if the polarity is correct
8. Contact configuration for Cell Switch can be changeable if necessary

Control circuit diagram

DC Switch-Disconnectors

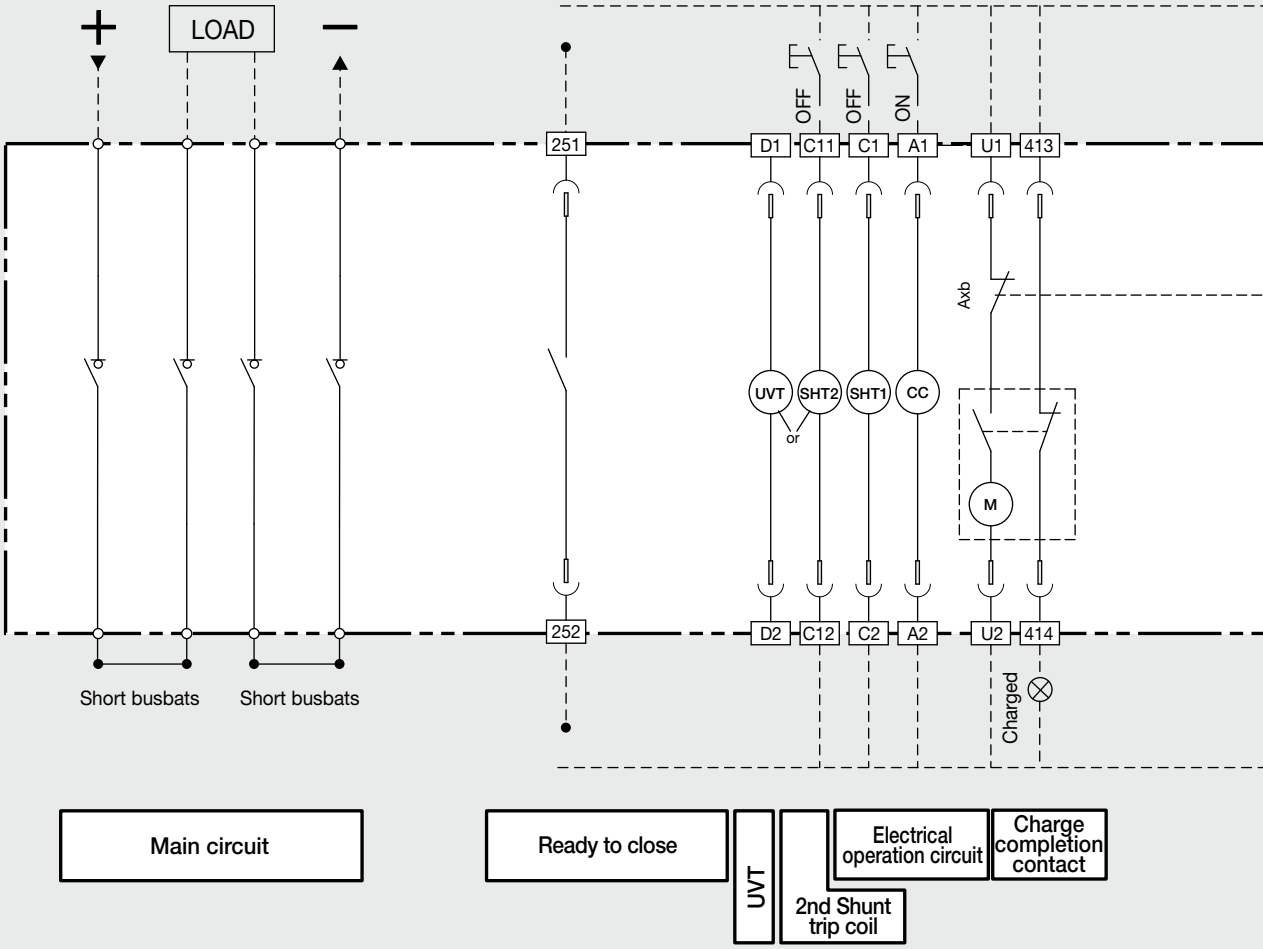

Terminal code description

13 14 ~ 63 64	Auxiliary switch "a"
11 12 ~ 61 62	Auxiliary switch "b"
413 414	Charge completion contact
U1 U2	Motor charging
A1 A2	Closing coil
C1 C2	Shunt trip
C11 C12	2nd shunt trip
D1 D2	Terminal of UVT
251 252	Ready to close switch

Accessory code description

Axa, Axb	Auxiliary switch
M	Charging motor
CC	Closing coil
SHT1	Shunt trip coil
SHT2	2nd shunt trip coil
UVT	UVT coil

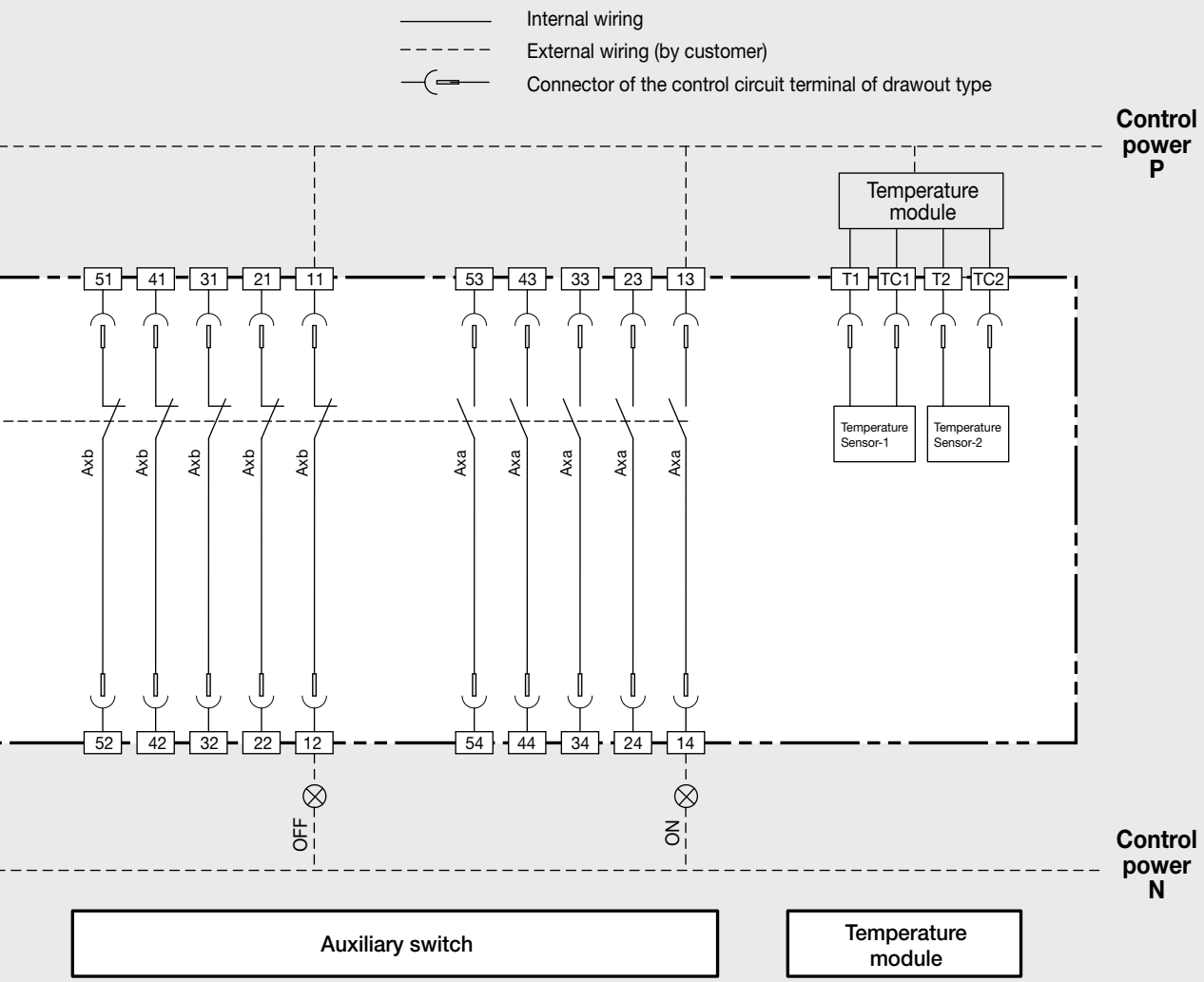

Note) 1. The diagram is shown with circuit de-energized, all devices open, connected and charged and relays in normal position
2. Charging type is "Off-Charging"
3. The standard of auxiliary contact is 3a3b
The auxiliary switch in above diagram is composed of 5a5b
4. Option
- Ready to close contact, UVT coil, charge completion contact, Secondary trip coil
- Cell switch, Temperature module, Remote close-open module
5. Refer to catalog for the connect of UVT
6. Contact configuration for Cell Switch can be changeable if necessary

Dimensions

Fixed type
(ADV/ADH-08~25E, DDH/DDV-08~32E)

(Unit : mm)

Front view

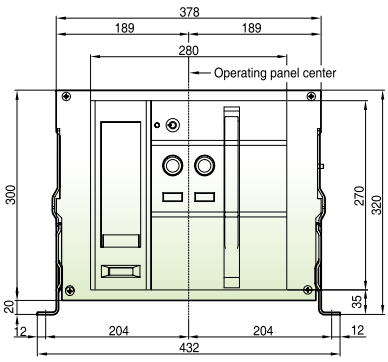

3P

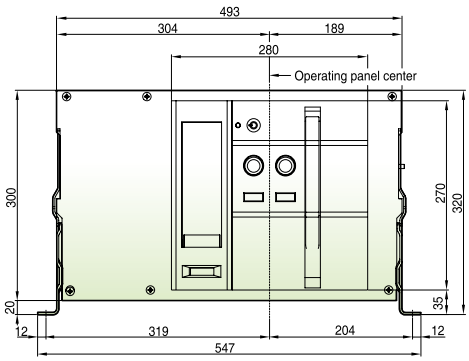

4P

Vertical type

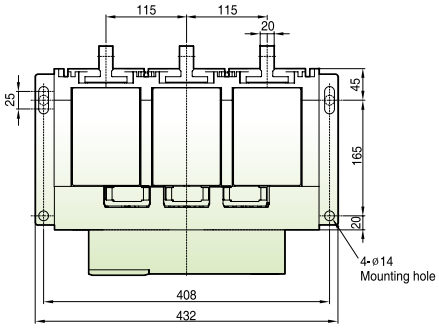

3P

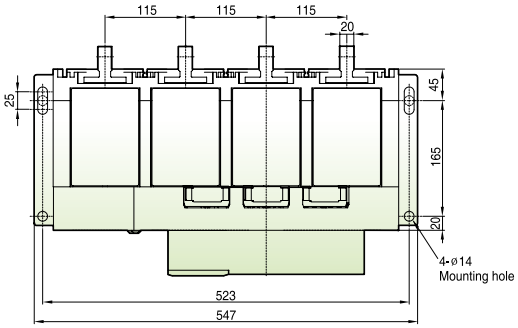

4P

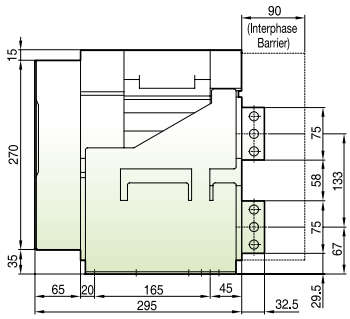

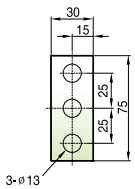

<Conductor>

Fixed type
(ADV/ADH-08~16E, DDH/DDV-08~32E)

(Unit : mm)

Horizontal type

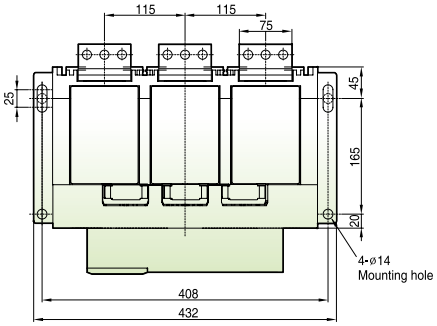

3P

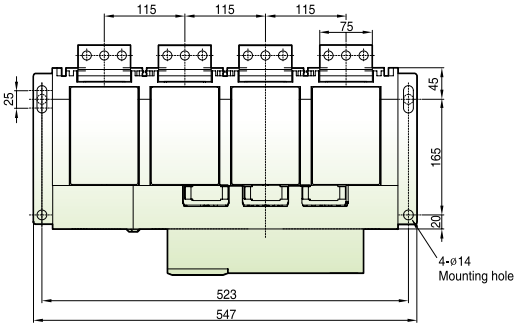

4P

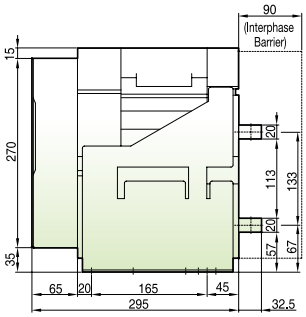

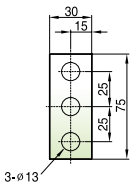

<Conductor>

Front connection type

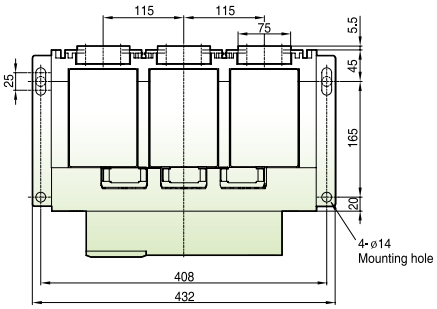

3P

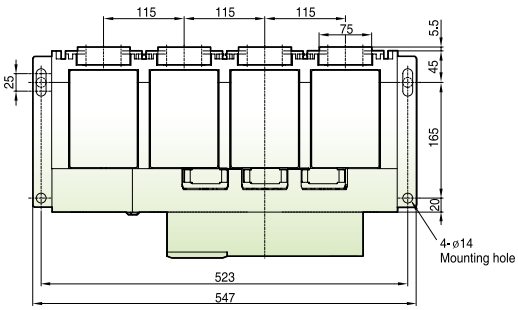

4P

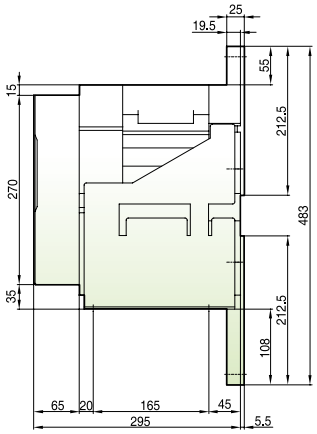

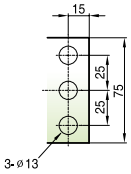

<Conductor>

Fixed type (DDH/DDV 4000AF)

(Unit : mm)

Vertical type

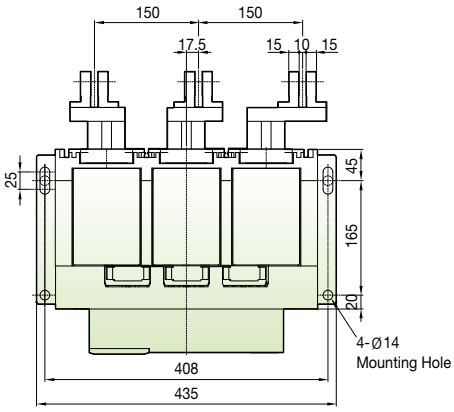

3P

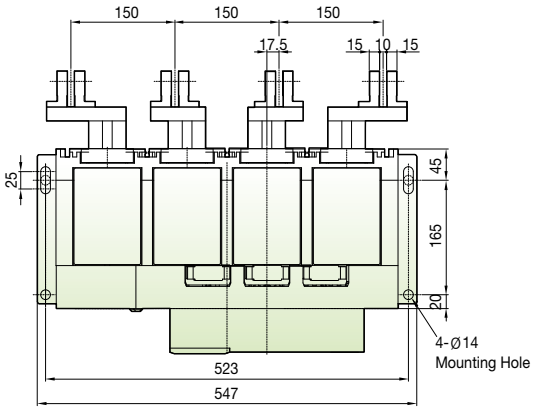

4P

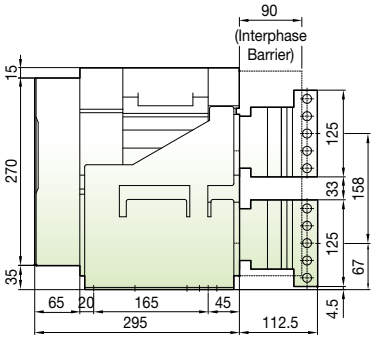

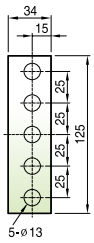

<Conductor>

Draw-out type
(ADV/ADH-08~25E, DDH/DDV 08~32E)

(Unit : mm)

Front view

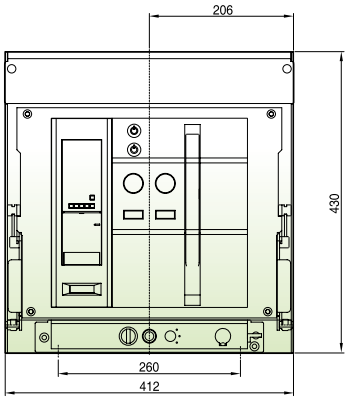

3P

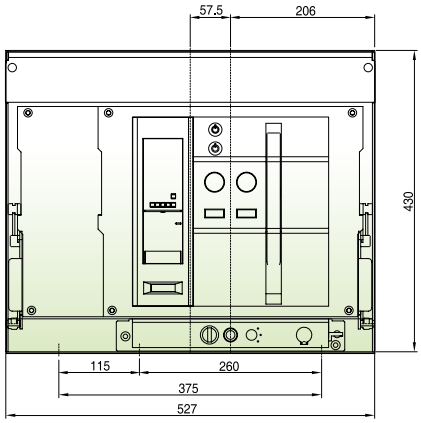

4P

Vertical type

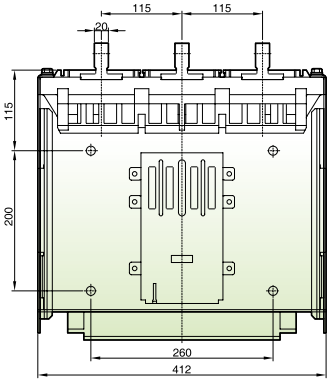

3P

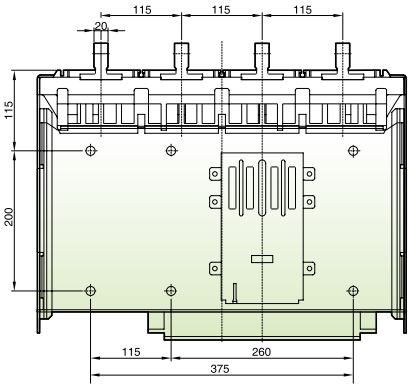

4P

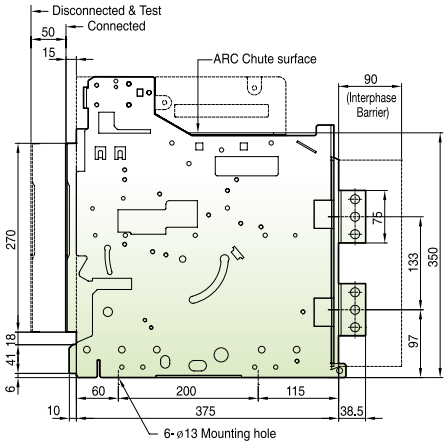

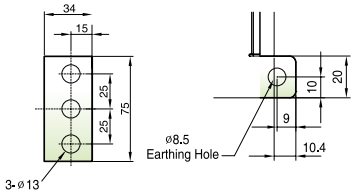

<Conductor>

Dimensions

Draw-out type (ADV/ADH-08~16E, DDH/DDV 08~32E)

(Unit : mm)

Horizontal type

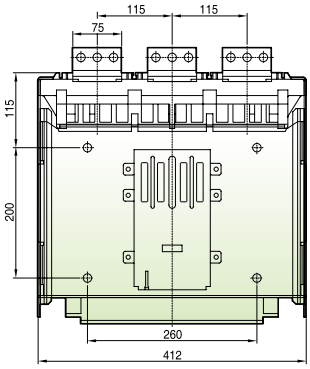

3P

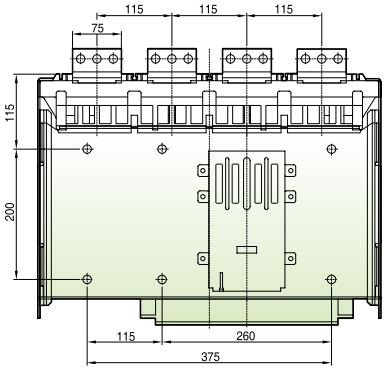

4P

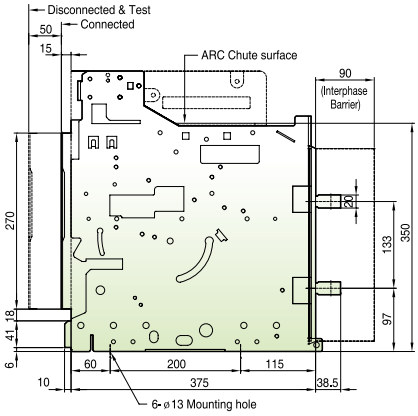

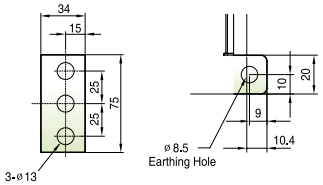

<Conductor>

Front connection type

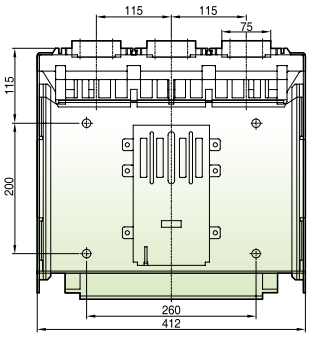

3P

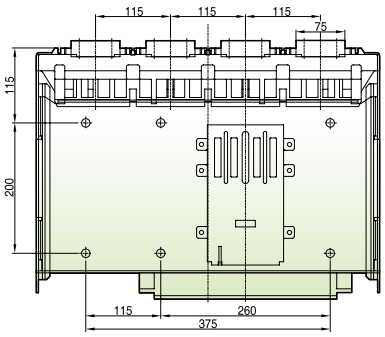

4P

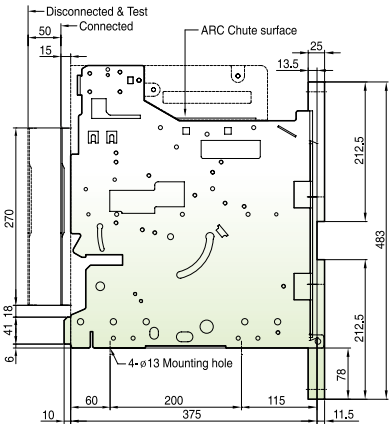

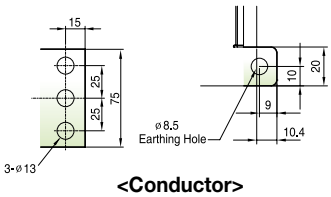

<Conductor>

Fixed type (ADV/ADH-32E)

(Unit : mm)

Front view

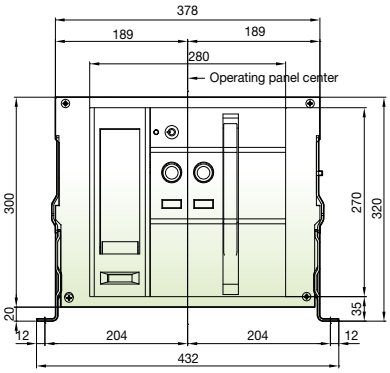

3P

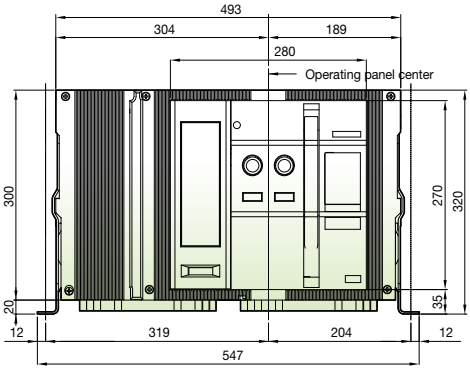

4P

Vertical type

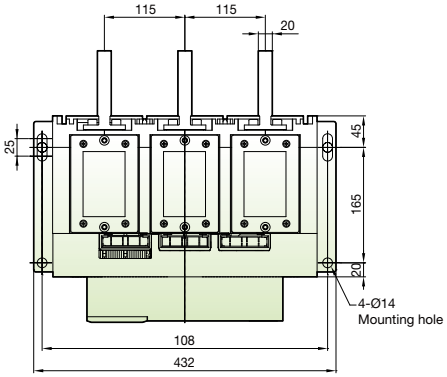

3P

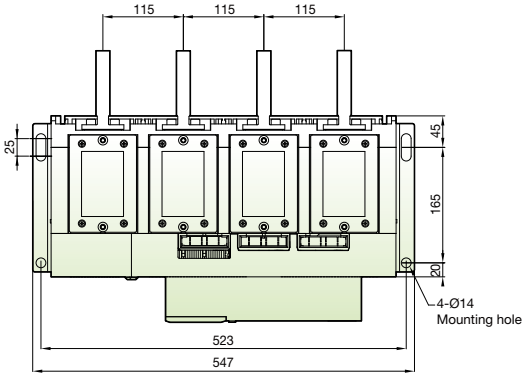

4P

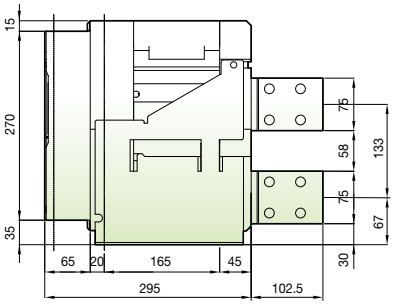

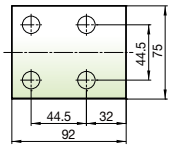

<Conductor>

Dimensions

Draw-out type (ADV/ADH-32E)

(Unit : mm)

Front view

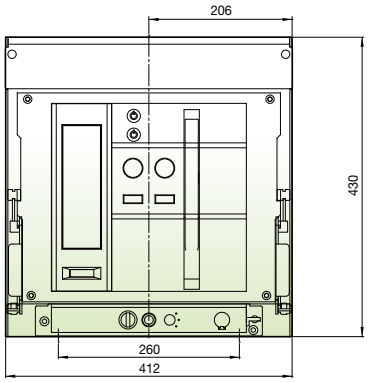

3P

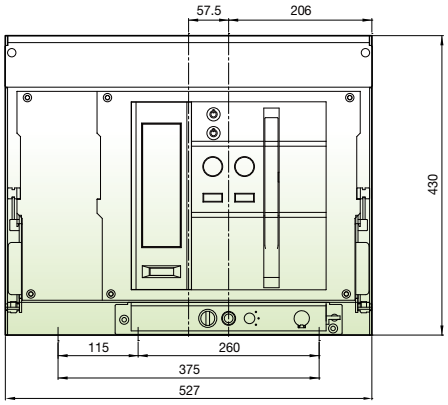

4P

Vertical type

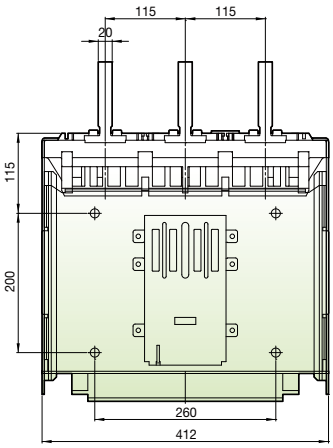

3P

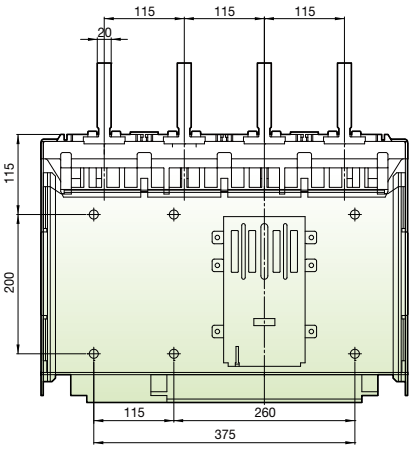

4P

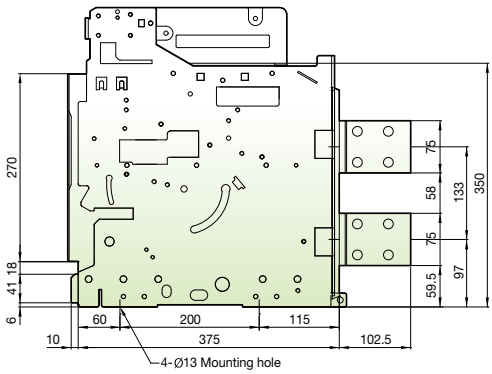

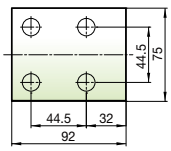

<Conductor>

Draw-out type (DDH/DDV 4000AF)

(Unit : mm)

Vertical type

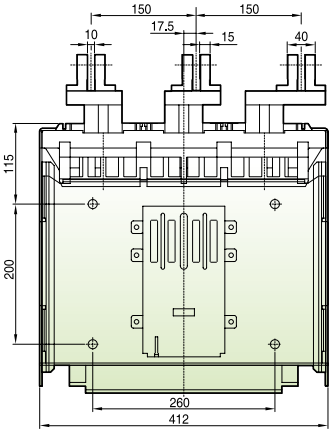

3P

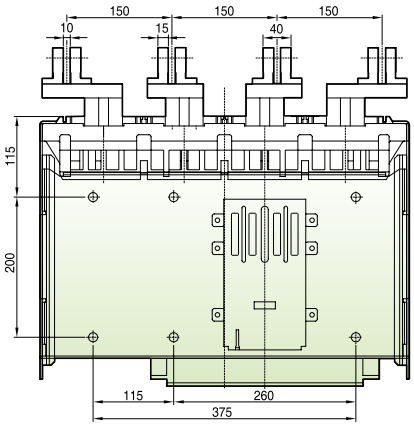

4P

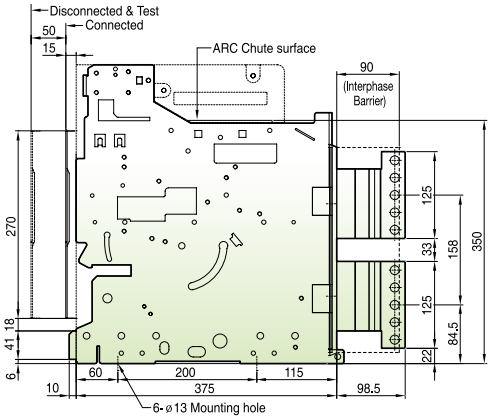

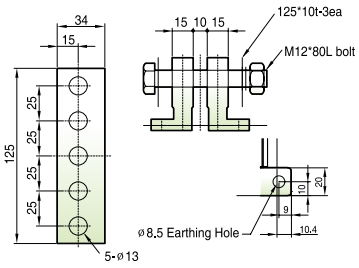

<Conductor>

Door Frame

<Dimensions>

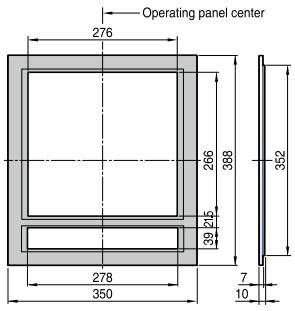

<Mounting hole>

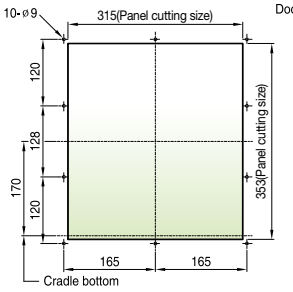

<Side hole>

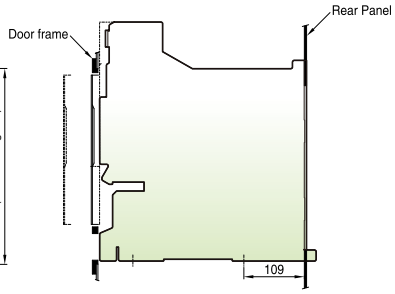

<Panel cutting>

Type	W
E3	408
E4	523

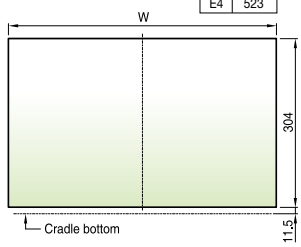

Note) The dimensions are for drawout type.

Temperature derating

Product model				Rated current	Applicable busbar size	Horizontal type					Vertical type				
DC ACB (IEC60947–2)			Switch–Disconnecors (IEC60947–3)			40°C	45°C	50°C	55°C	60°C	40°C	45°C	50°C	55°C	60°C
ADH-16E ADV-16E			DDH/DDV - 08~32E	800A	6T×50×2ea	800A	800A	800A	800A	800A	800A	800A	800A	800A	800A
					10T×60×1ea										
				1000A	8T×50×2ea	1000A	1000A	1000A	1000A	1000A	1000A	1000A	1000A	1000A	1000A
				1250A	6T×75×2ea	1250A	1250A	1250A	1250A	1250A	1250A	1250A	1250A	1250A	1250A
					8T×60×2ea										
					10T×50×2ea										
	ADH-25E ADV-25E	ADH-32E ADV-32E		1600A	6T×75×3ea	1600A	1600A	1600A	1600A	1600A	1600A	1600A	1600A	1600A	1600A
					8T×60×3ea										
					10T×60×2ea										
				2000A	8T×75×3ea	2000A	2000A	2000A	2000A	2000A	2000A	2000A	2000A	2000A	2000A
					10T×100×2ea	-	-	-	-	-					
				2500A	8T×75×4ea	2500A	2500A	2500A	**2400A**	**2300A**	2500A	2500A	2500A	2500A	**2400A**
					10T×75×3ea										
				3200A	10T×75×4ea	3200A	3200A	**3100A**	**3000A**	**2900A**	3200A	3200A	**3120A**	**3050A**	**2950A**
					10T×100×3ea	-	-	-	-	-					
			DDH/DDV - 40E	4000A	10T×75×5ea	-	-	-	-	-	4000A	4000A	**3950A**	**3800A**	**3680A**
					10T×100×4ea										

Installation recommendation

Insulation clearance

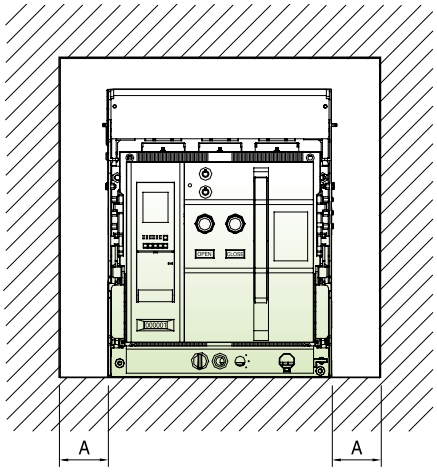

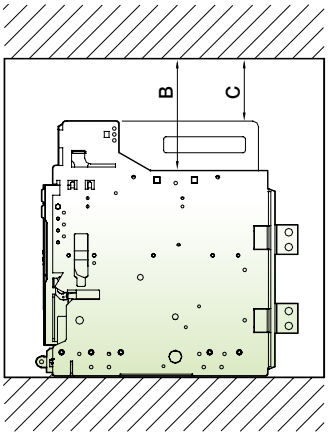

Type	A	B	C
Fixed	50	150	N/A
Draw-out	5	N/A	0

Minimum clearances distance

For the safety, all the electric charging parts need to be installed over minimum clearances distance.

Insulating voltage (Ui)	Minimum clearances distance (X min)
Less than DC 1000V	14 mm
DC 1500V	16 mm

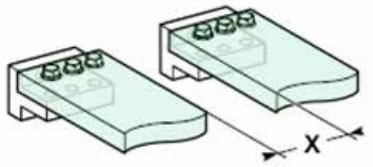

Installation recommendation

BUS-BAR Connection

Cables connections

Make sure that no excessive mechanical force put on the rear terminals for cable connection.
Extension terminal is fixed such as B, C and cable is to fixed to the frame such as E

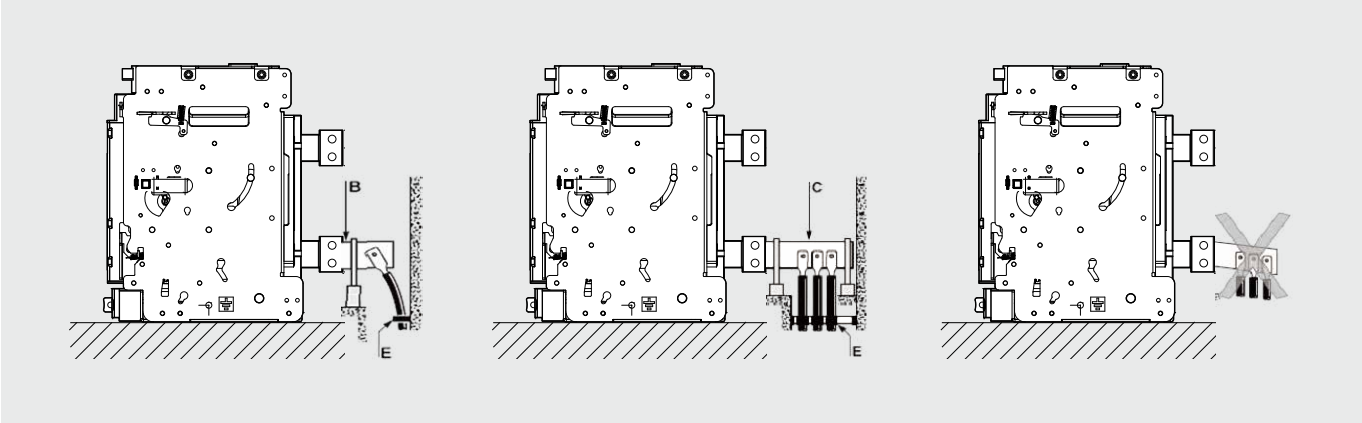

Bus-bar connection

For busbar connection, connect access parts with a provided torque and fix with parallel installing the support not to apply terminal weight to circuit breaker. In order to prevent the spread safety or secondary accidents, secure maximum safe distance A (Table 1) from the access area to withstand the electrical force during the short circuit faults. (Support strength: base of Insulator, bending load 720kg or more, tensile strength 3000kg or more)

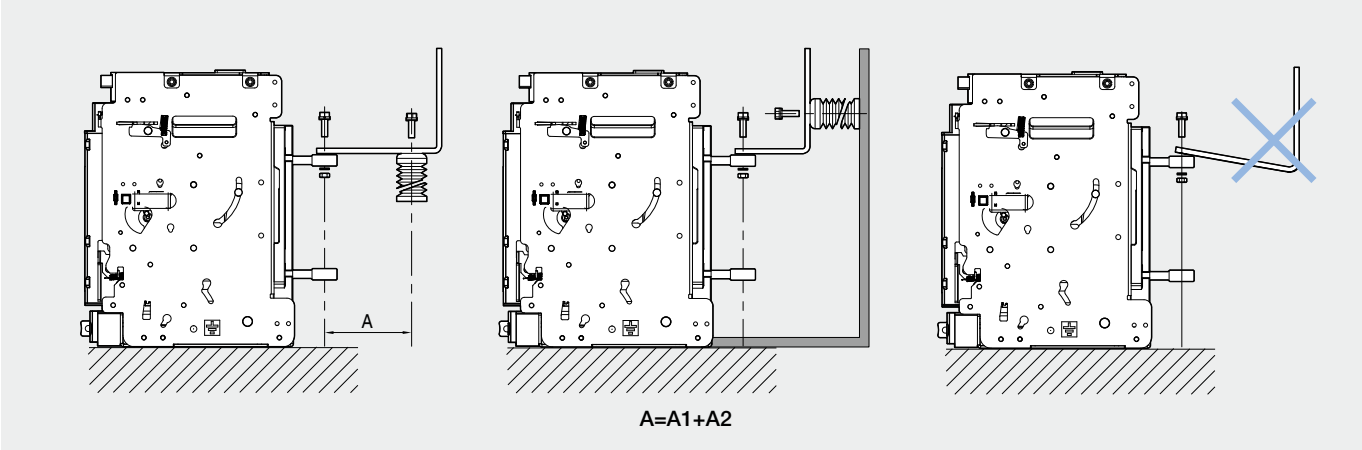

※ Warranty can not be applied to product damage due to arbitrary alterations.

(Table 1) Maximum safe distance

Short capacity (kA)	30	50	65	80	100	150
Length A (mm)	350	300	250	150	150	150

Rated ultimate short-circuit breaking current (Icu) according to the type of network

Earthed negative polarity

Series connection of poles	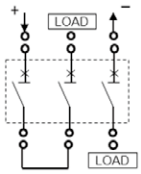			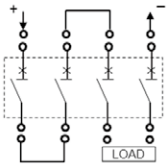								
Rated Voltage (Ue)	≤ DC 750V			≤ DC 750V								
Type of fault	a	b		a	b							
Poles in series affected by the fault	3	2		4	3							
Earthed negative polarity 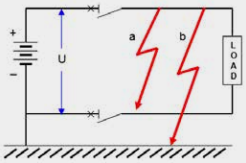	65kA	40kA		65kA	65kA							

Mid-point earthed

Series connection of poles	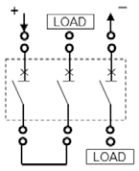			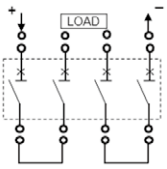								
Rated Voltage (Ue)	≤ DC 750V			≤ DC 750V			≤ DC 1000V			≤ DC 1500V		
Type of fault	a	b	c	a	b	c	a	b	c	a	b	c
Poles in series affected by the fault	3	2	1	4	2	2	4	2	2	4	2	2
Voltage applied poles by the fault	750V	375V	375V	750V	375V	375V	1000V	500V	500V	1500V	750V	750V
Mid-point earthed 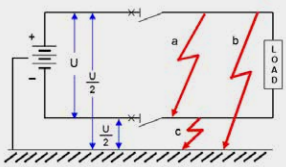	65kA	65kA	40kA	65kA			50kA			40kA		

Insulated network

Series connection of poles	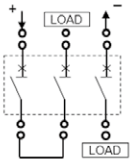		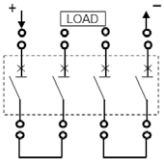	
Rated Voltage (Ue)	≤ DC 750V	≤ DC 1000V	≤ DC 1000V	≤ DC 1500V
Poles in series affected by the fault	3	3	4	4
Insulated network 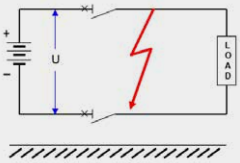	70kA	70kA	70kA	60kA

Note 1) Icu with L/R=15ms according to IEC 60947-2 S tandard.
Note 2) For further information, ask LSIS.

Earthed negative polarity

Series connection of poles	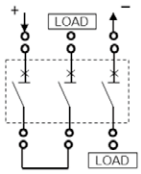			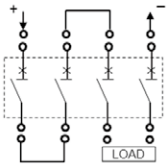								
Rated Voltage (Ue)	≤ DC 500V			≤ DC 500V								
Type of fault	a	b		a	b							
Poles in series affected by the fault	3	2		4	3							
Earthed negative polarity 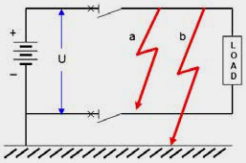	65kA	40kA		65kA	65kA							

Mid-point earthed

Series connection of poles	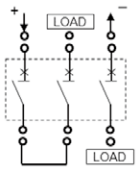			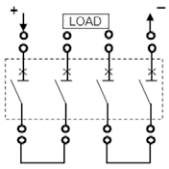								
Rated Voltage (Ue)	≤ DC 500V			≤ DC 500V			≤ DC 750V			≤ DC 1000V		
Type of fault	a	b	c	a	b	c	a	b	c	a	b	c
Poles in series affected by the fault	3	2	1	4	2	2	4	2	2	4	2	2
Voltage applied poles by the fault	500V	250V	250V	500V	250V	250V	700V	350V	350V	1000V	500V	500V
Mid-point earthed 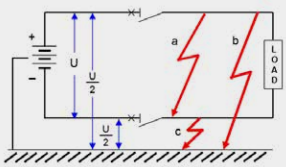	65kA	65kA	40kA	65kA			50kA			40kA		

Insulated network

Series connection of poles	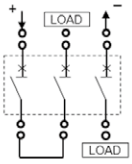		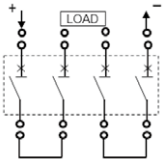	
Rated Voltage (Ue)	≤ DC 500V	≤ DC 750V	≤ DC 750V	≤ DC 1000V
Poles in series affected by the fault	3	3	4	4
Insulated network 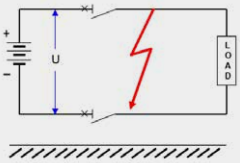	65kA	40kA	50kA	40kA

Note 1) Icu with L/R=15ms according to IEC 60947-2 S tandard.
Note 2) For further information, ask LSIS.

Time chart

Thermal (Long time cold)

x Ir	0.5	1	2	4	8	12	16	20	24
1.11	58806	117611	235223	470445	940890	1411335	1881780	2352225	2822670
1.15	36041	72082	144163	288326	576652	864978	1153305	1441631	1729957
1.20	26827	53654	107308	214615	429231	643846	858461	1073077	1287692
1.25	21777	43553	87106	174212	348424	522636	696848	871060	1045272
1.30	18408	36817	73634	147268	294535	441803	589071	736338	883606
1.35	15947	31895	63789	127579	255157	382736	510314	637893	765472
1.40	14049	28098	56197	112393	224787	337180	449573	561967	674360
1.45	12532	25063	50126	100252	200504	300756	401009	501261	601513
1.50	11286	22573	45145	90290	180580	270870	361160	451450	541740
1.55	10244	20488	40977	81954	163907	245861	327814	409768	491721
1.60	9359	18717	37434	74869	149737	224606	299474	374343	449212
1.65	8596	17193	34386	68771	137542	206313	275084	343855	412626
1.70	7934	15867	31734	63468	126936	190404	253873	317341	380809
1.75	7352	14704	29408	58815	117631	176446	235261	294077	352892
1.80	6838	13675	27351	54702	109404	164106	218808	273509	328211
1.85	6380	12760	25521	51041	102082	153123	204164	255205	306246
1.90	5970	11941	23882	47764	95528	143292	191056	238820	286584
1.95	5602	11204	22408	44815	89630	134446	179261	224076	268891
2.00	5269	10537	21075	42150	84299	126449	168598	210748	252897
2.05	4966	9932	19865	39730	79459	119189	158919	198649	238378
2.10	4691	9381	18762	37525	75049	112574	150099	187623	225148
2.15	4439	8877	17754	35508	71017	106525	142034	177542	213050
2.20	4207	8415	16829	33659	67318	100976	134635	168294	201953
2.25	3995	7989	15979	31957	63914	95871	127829	159786	191743
2.30	3798	7597	15194	30387	60775	91162	121550	151937	182324
2.35	3617	7234	14468	28936	57871	86807	115742	144678	173614
2.40	3449	6897	13795	27590	55180	82769	110359	137949	165539
2.45	3292	6585	13170	26339	52679	79018	105358	131697	158037
2.50	3147	6294	12588	25176	50351	75527	100702	125878	151053
2.55	3011	6022	12045	24090	48180	72269	96359	120449	144539
2.60	2884	5769	11538	23075	46151	69226	92301	115377	138452
2.65	2766	5531	11063	22126	44251	66377	88503	110628	132754
2.70	2654	5309	10618	21235	42471	63706	84941	106177	127412
2.75	2550	5100	10200	20399	40799	61198	81597	101997	122396
2.80	2452	4903	9807	19613	39226	58840	78453	98066	117679
2.85	2359	4718	9436	18873	37746	56619	75491	94364	113237
2.90	2272	4544	9087	18175	36350	54524	72699	90874	109049
2.95	2189	4379	8758	17516	35032	52547	70063	87579	105095
3.00	2112	4223	8446	16893	33786	50679	67572	84464	101357
3.05	2038	4076	8152	16303	32607	48910	65214	81517	97821
3.10	1968	3936	7872	15745	31490	47235	62980	78725	94470
3.15	1902	3804	7608	15215	30431	45646	60862	76077	91292
3.20	1839	3678	7356	14713	29425	44138	58851	73563	88276
3.25	1779	3559	7117	14235	28470	42705	56940	71175	85410
3.30	1723	3445	6890	13781	27561	41342	55122	68903	82684
3.35	1669	3337	6674	13348	26696	40044	53392	66741	80089

x Ir	0.5	1	2	4	8	12	16	20	24
3.40	1617	3234	6468	12936	25872	38808	51744	64680	77616
3.45	1568	3136	6272	12543	25086	37629	50172	62715	75259
3.50	1521	3042	6084	12168	24336	36504	48672	60841	73009
3.55	1476	2952	5905	11810	23620	35430	47240	59050	70860
3.60	1433	2867	5734	11468	22935	34403	45871	57338	68806
3.65	1393	2785	5570	11140	22281	33421	44561	55702	66842
3.70	1353	2707	5413	10827	21654	32481	43308	54135	64962
3.75	1316	2632	5263	10527	21054	31581	42108	52634	63161
3.80	1280	2560	5120	10239	20479	30718	40957	51196	61436
3.85	1245	2491	4982	9963	19927	29890	39854	49817	59781
3.90	1212	2425	4849	9699	19398	29096	38795	48494	58193
3.95	1181	2361	4722	9445	18889	28334	37779	47223	56668
4.00	1150	2300	4600	9201	18401	27602	36802	46003	55203
4.05	1121	2241	4483	8966	17932	26898	35864	44830	53796
4.10	1093	2185	4370	8740	17481	26221	34961	43701	52442
4.15	1065	2131	4262	8523	17046	25569	34092	42615	51139
4.20	1039	2079	4157	8314	16628	24942	33256	41570	49884
4.25	1014	2028	4056	8113	16225	24338	32451	40563	48676
4.30	990	1980	3959	7919	15837	23756	31674	39593	47512
4.35	966	1933	3866	7731	15463	23194	30926	38657	46389
4.40	944	1888	3776	7551	15102	22653	30204	37755	45306
4.45	922	1844	3688	7377	14754	22131	29507	36884	44261
4.50	901	1802	3604	7209	14417	21626	28835	36043	43252
4.55	881	1762	3523	7046	14093	21139	28185	35231	42278
4.60	861	1722	3445	6889	13779	20668	27557	34447	41336
4.65	842	1684	3369	6738	13475	20213	26951	33688	40426
4.70	824	1648	3295	6591	13182	19773	26364	32955	39546
4.75	806	1612	3225	6449	12898	19347	25796	32245	38695
4.80	789	1578	3156	6312	12624	18935	25247	31559	37871
4.85	772	1545	3089	6179	12358	18536	24715	30894	37073
4.90	756	1513	3025	6050	12100	18150	24200	30250	36300
4.95	741	1481	2963	5925	11851	17776	23701	29627	35552
5.00	726	1451	2902	5804	11609	17413	23218	29022	34827
5.05	711	1422	2844	5687	11374	17062	22749	28436	34123
5.10	697	1393	2787	5574	11147	16721	22294	27868	33441
5.15	683	1366	2732	5463	10927	16390	21853	27317	32780
5.20	670	1339	2678	5356	10713	16069	21425	26782	32138
5.25	657	1313	2626	5252	10505	15757	21010	26262	31515
5.30	644	1288	2576	5152	10303	15455	20607	25758	30910
5.35	632	1263	2527	5054	10107	15161	20215	25268	30322
5.40	620	1240	2479	4959	9917	14876	19834	24793	29751
5.45	608	1217	2433	4866	9732	14598	19464	24330	29196
5.50	597	1194	2388	4776	9552	14329	19105	23881	28657
5.55	586	1172	2344	4689	9378	14066	18755	23444	28133
5.60	575	1151	2302	4604	9207	13811	18415	23019	27622
5.65	565	1130	2261	4521	9042	13563	18084	22605	27126

Thermal (Long time cold)

x Ir	0.5	1	2	4	8	12	16	20	24
5.70	555	1110	2220	4441	8881	13322	17762	22203	26643
5.75	545	1091	2181	4362	8724	13087	17449	21811	26173
5.80	536	1071	2143	4286	8572	12858	17144	21430	25716
5.85	526	1053	2106	4212	8423	12635	16847	21058	25270
5.90	517	1035	2070	4139	8279	12418	16557	20697	24836
5.95	509	1017	2034	4069	8138	12206	16275	20344	24413
6.00	500	1000	2000	4000	8000	12000	16000	20001	24001
6.05	500	983	1967	3933	7866	11799	15733	19666	23599
6.10	500	967	1934	3868	7736	11604	15471	19339	23207
6.15	500	951	1902	3804	7608	11413	15217	19021	22825
6.20	500	936	1871	3742	7484	11226	14968	18710	22453
6.25	500	920	1841	3682	7363	11045	14726	18408	22089
6.30	500	906	1811	3622	7245	10867	14490	18112	21734
6.35	500	891	1782	3565	7129	10694	14259	17823	21388
6.40	500	877	1754	3508	7017	10525	14034	17542	21050
6.45	500	863	1727	3453	6907	10360	13814	17267	20720
6.50	500	850	1700	3400	6799	10199	13599	16998	20398
6.55	500	837	1674	3347	6694	10042	13389	16736	20083
6.60	500	824	1648	3296	6592	9888	13184	16480	19776
6.65	500	811	1623	3246	6492	9738	12984	16230	19476
6.70	500	799	1598	3197	6394	9591	12788	15985	19182
6.75	500	787	1575	3149	6298	9447	12597	15746	18895
6.80	500	776	1551	3102	6205	9307	12410	15512	18614
6.85	500	764	1528	3057	6113	9170	12227	15283	18340
6.90	500	753	1506	3012	6024	9036	12048	15060	18072
6.95	500	742	1484	2968	5936	8905	11873	14841	17809
7.00	500	731	1463	2925	5851	8776	11702	14627	17553
7.05	500	721	1442	2884	5767	8651	11534	14418	17302
7.10	500	711	1421	2843	5685	8528	11371	14213	17056
7.15	500	701	1401	2803	5605	8408	11210	14013	16815
7.20	500	691	1382	2763	5527	8290	11053	13816	16580
7.25	500	681	1362	2725	5450	8175	10899	13624	16349
7.30	500	672	1344	2687	5374	8062	10749	13436	16123
7.35	500	663	1325	2650	5301	7951	10601	13252	15902
7.40	500	654	1307	2614	5229	7843	10457	13071	15686
7.45	500	645	1289	2579	5158	7737	10316	12895	15473
7.50	500	636	1272	2544	5089	7633	10177	12721	15266
7.55	500	628	1255	2510	5021	7531	10041	12552	15062
7.60	500	619	1239	2477	4954	7431	9908	12385	14862
7.65	500	611	1222	2444	4889	7333	9778	12222	14667
7.70	500	603	1206	2412	4825	7237	9650	12062	14475
7.75	500	595	1191	2381	4762	7143	9524	11906	14287
7.80	500	588	1175	2350	4701	7051	9401	11752	14102
7.85	500	580	1160	2320	4640	6961	9281	11601	13921
7.90	500	573	1145	2291	4581	6872	9163	11453	13744
7.95	500	565	1131	2262	4523	6785	9047	11308	13570

x Ir	0.5	1	2	4	8	12	16	20	24
8.00	500	558	1117	2233	4466	6700	8933	11166	13399
8.05	500	551	1103	2205	4411	6616	8821	11026	13232
8.10	500	544	1089	2178	4356	6534	8712	10889	13067
8.15	500	538	1076	2151	4302	6453	8604	10755	12906
8.20	500	531	1062	2125	4249	6374	8498	10623	12748
8.25	500	525	1049	2099	4197	6296	8395	10494	12592
8.30	500	518	1037	2073	4147	6220	8293	10366	12440
8.35	500	512	1024	2048	4097	6145	8193	10242	12290
8.40	500	506	1012	2024	4048	6071	8095	10119	12143
8.45	500	500	1000	2000	3999	5999	7999	9998	11998
8.50	500	500	988	1976	3952	5928	7904	9880	11856
8.55	500	500	976	1953	3906	5858	7811	9764	11717
8.60	500	500	965	1930	3860	5790	7720	9650	11580
8.65	500	500	954	1908	3815	5723	7630	9538	11445
8.70	500	500	943	1886	3771	5657	7542	9428	11313
8.75	500	500	932	1864	3728	5592	7455	9319	11183
8.80	500	500	921	1843	3685	5528	7370	9213	11055
8.85	500	500	911	1822	3643	5465	7287	9108	10930
8.90	500	500	901	1801	3602	5403	7204	9005	10806
8.95	500	500	890	1781	3562	5343	7123	8904	10685
9.00	500	500	880	1761	3522	5283	7044	8805	10566
9.05	500	500	871	1741	3483	5224	6966	8707	10448
9.10	500	500	861	1722	3444	5167	6889	8611	10333
9.15	500	500	852	1703	3407	5110	6813	8516	10220
9.20	500	500	842	1685	3369	5054	6739	8423	10108
9.25	500	500	833	1666	3333	4999	6666	8332	9998
9.30	500	500	824	1648	3297	4945	6594	8242	9890
9.35	500	500	815	1631	3261	4892	6523	8153	9784
9.40	500	500	807	1613	3227	4840	6453	8066	9680
9.45	500	500	798	1596	3192	4788	6384	7981	9577
9.50	500	500	790	1579	3159	4738	6317	7896	9476
9.55	500	500	781	1563	3125	4688	6251	7813	9376
9.60	500	500	773	1546	3093	4639	6185	7732	9278
9.65	500	500	765	1530	3060	4591	6121	7651	9181
9.70	500	500	757	1514	3029	4543	6058	7572	9086
9.75	500	500	749	1499	2998	4496	5995	7494	8993
9.80	500	500	742	1483	2967	4450	5934	7417	8901
9.85	500	500	734	1468	2937	4405	5873	7342	8810
9.90	500	500	727	1453	2907	4360	5814	7267	8721
9.95	500	500	719	1439	2878	4316	5755	7194	8633
10.00	500	500	712	1424	2849	4273	5697	7122	8546

※ Minimum trip operation time is 0.5sec (Thermal On/Off) regardless of characteristic curve.

Time chart

Short time

x Ir	Tripping time (msec)				
	0.05	0.1	0.2	0.3	0.4
1.50	2222	4444	8889	13333	17778
1.55	2081	4162	8325	12487	16649
1.60	1953	3906	7813	11719	15625
1.65	1837	3673	7346	11019	14692
1.70	1730	3460	6920	10381	13841
1.75	1633	3265	6531	9796	13061
1.80	1543	3086	6173	9259	12346
1.85	1461	2922	5844	8766	11687
1.90	1385	2770	5540	8310	11080
1.95	1315	2630	5260	7890	10519
2.00	1250	2500	5000	7500	10000
2.05	1190	2380	4759	7139	9518
2.10	1134	2268	4535	6803	9070
2.15	1082	2163	4327	6490	8653
2.20	1033	2066	4132	6198	8264
2.25	988	1975	3951	5926	7901
2.30	945	1890	3781	5671	7561
2.35	905	1811	3622	5432	7243
2.40	868	1736	3472	5208	6944
2.45	833	1666	3332	4998	6664
2.50	800	1600	3200	4800	6400
2.55	769	1538	3076	4614	6151
2.60	740	1479	2959	4438	5917
2.65	712	1424	2848	4272	5696
2.70	686	1372	2743	4115	5487
2.75	661	1322	2645	3967	5289
2.80	638	1276	2551	3827	5102
2.85	616	1231	2462	3693	4925
2.90	595	1189	2378	3567	4756
2.95	575	1149	2298	3447	4596
3.00	556	1111	2222	3333	4444
3.05	537	1075	2150	3225	4300
3.10	520	1041	2081	3122	4162
3.15	504	1008	2016	3023	4031
3.20	488	977	1953	2930	3906
3.25	473	947	1893	2840	3787
3.30	459	918	1837	2755	3673
3.35	446	891	1782	2673	3564
3.40	433	865	1730	2595	3460
3.45	420	840	1680	2520	3361
3.50	408	816	1633	2449	3265
3.55	397	793	1587	2380	3174
3.60	386	772	1543	2315	3086
3.65	375	751	1501	2252	3002
3.70	365	730	1461	2191	2922
3.75	356	711	1422	2133	2844
3.80	346	693	1385	2078	2770
3.85	337	675	1349	2024	2699
3.90	329	657	1315	1972	2630
3.95	320	641	1282	1923	2564
4.00	313	625	1250	1875	2500
4.05	305	610	1219	1829	2439
4.10	297	595	1190	1785	2380
4.15	290	581	1161	1742	2323
4.20	283	567	1134	1701	2268
4.25	277	554	1107	1661	2215
4.30	270	541	1082	1622	2163

x Ir	Tripping time (msec)				
	0.05	0.1	0.2	0.3	0.4
4.35	264	528	1057	1585	2114
4.40	258	517	1033	1550	2066
4.45	252	505	1010	1515	2020
4.50	247	494	988	1481	1975
4.55	242	483	966	1449	1932
4.60	236	473	945	1418	1890
4.65	231	462	925	1387	1850
4.70	226	453	905	1358	1811
4.75	222	443	886	1330	1773
4.80	217	434	868	1302	1736
4.85	213	425	850	1275	1700
4.90	208	416	833	1249	1666
4.95	204	408	816	1224	1632
5.00	200	400	800	1200	1600
5.05	196	392	784	1176	1568
5.10	192	384	769	1153	1538
5.15	189	377	754	1131	1508
5.20	185	370	740	1109	1479
5.25	181	363	726	1088	1451
5.30	178	356	712	1068	1424
5.35	175	349	699	1048	1398
5.40	171	343	686	1029	1372
5.45	168	337	673	1010	1347
5.50	165	331	661	992	1322
5.55	162	325	649	974	1299
5.60	159	319	638	957	1276
5.65	157	313	627	940	1253
5.70	154	308	616	923	1231
5.75	151	302	605	907	1210
5.80	149	297	595	892	1189
5.85	146	292	584	877	1169
5.90	144	287	575	862	1149
5.95	141	282	565	847	1130
6.00	139	278	556	833	1111
6.05	137	273	546	820	1093
6.10	134	269	537	806	1075
6.15	132	264	529	793	1058
6.20	130	260	520	780	1041
6.25	128	256	512	768	1024
6.30	126	252	504	756	1008
6.35	124	248	496	744	992
6.40	122	244	488	732	977
6.45	120	240	481	721	961
6.50	118	237	473	710	947
6.55	117	233	466	699	932
6.60	115	230	459	689	918
6.65	113	226	452	678	905
6.70	111	223	446	668	891
6.75	110	219	439	658	878
6.80	108	216	433	649	865
6.85	107	213	426	639	852
6.90	105	210	420	630	840
6.95	104	207	414	621	828
7.00	102	204	408	612	816
7.05	101	201	402	604	805
7.10	99	198	397	595	793
7.15	98	196	391	587	782

Short time

x Ir	Tripping time (msec)				
	0.05	0.1	0.2	0.3	0.4
7.20	96	193	386	579	772
7.25	95	190	380	571	761
7.30	94	188	375	563	751
7.35	93	185	370	555	740
7.40	91	183	365	548	730
7.45	90	180	360	541	721
7.50	89	178	356	533	711
7.55	88	175	351	526	702
7.60	87	173	346	519	693
7.65	85	171	342	513	683
7.70	84	169	337	506	675
7.75	83	166	333	499	666
7.80	82	164	329	493	657
7.85	81	162	325	487	649
7.90	80	160	320	481	641
7.95	79	158	316	475	633
8.00	78	156	312	469	625
8.05	77	154	309	463	617
8.10	76	152	305	457	610
8.15	75	151	301	452	602
8.20	74	149	297	446	595
8.25	73	147	294	441	588
8.30	73	145	290	435	581
8.35	72	143	287	430	574
8.40	71	142	283	425	567
8.45	70	140	280	420	560
8.50	69	138	277	415	554
8.55	68	137	274	410	547
8.60	68	135	270	406	541
8.65	67	134	267	401	535
8.70	66	132	264	396	528
8.75	65	131	261	392	522
8.80	65	129	258	387	517
8.85	64	128	255	383	511
8.90	63	126	252	379	505
8.95	62	125	250	375	499
9.00	62	123	247	370	494
9.05	61	122	244	366	488
9.10	60	121	242	362	483
9.15	60	119	239	358	478
9.20	59	118	236	354	473
9.25	58	117	234	351	467
9.30	58	116	231	347	462
9.35	57	114	229	343	458
9.40	57	113	226	340	453
9.45	56	112	224	336	448
9.50	55	111	222	332	443
9.55	55	110	219	329	439
9.60	54	109	217	326	434
9.65	54	107	215	322	430
9.70	53	106	213	319	425
9.75	53	105	210	316	421
9.80	52	104	208	312	416
9.85	52	103	206	309	412
9.90	51	102	204	306	408
9.95	51	101	202	303	404

Ground fault

x In	Tripping time (msec)						
(±20%)	0.1	0.2	0.3	0.4	1	2	3
0.20	2500	5000	7500	10000	25000	50000	75000
0.21	2268	4535	6803	9070	22676	45351	68027
0.22	2066	4132	6198	8264	20661	41322	61983
0.23	1890	3781	5671	7561	18904	37807	56711
0.24	1736	3472	5208	6944	17361	34722	52083
0.25	1600	3200	4800	6400	16000	32000	48000
0.26	1479	2959	4438	5917	14793	29586	44379
0.27	1372	2743	4115	5487	13717	27435	41152
0.28	1276	2551	3827	5102	12755	25510	38265
0.29	1189	2378	3567	4756	11891	23781	35672
0.30	1111	2222	3333	4444	11111	22222	33333
0.31	1041	2081	3122	4162	10406	20812	31217
0.32	977	1953	2930	3906	9766	19531	29297
0.33	918	1837	2755	3673	9183	18365	27548
0.34	865	1730	2595	3460	8651	17301	25952
0.35	816	1633	2449	3265	8163	16327	24490
0.36	772	1543	2315	3086	7716	15432	23148
0.37	730	1461	2191	2922	7305	14609	21914
0.38	693	1385	2078	2770	6925	13850	20776
0.39	657	1315	1972	2630	6575	13149	19724
0.40	625	1250	1875	2500	6250	12500	18750
0.41	595	1190	1785	2380	5949	11898	17847
0.42	567	1134	1701	2268	5669	11338	17007
0.43	541	1082	1622	2163	5408	10817	16225
0.44	517	1033	1550	2066	5165	10331	15496
0.45	494	988	1481	1975	4938	9877	14815
0.46	473	945	1418	1890	4726	9452	14178
0.47	453	905	1358	1811	4527	9054	13581
0.48	434	868	1302	1736	4340	8681	13021
0.49	416	833	1249	1666	4165	8330	12495
0.50	400	800	1200	1600	4000	8000	12000
0.51	384	769	1153	1538	3845	7689	11534
0.52	370	740	1109	1479	3698	7396	11095
0.53	356	712	1068	1424	3560	7120	10680
0.54	343	686	1029	1372	3429	6859	10288
0.55	331	661	992	1322	3306	6612	9917
0.56	319	638	957	1276	3189	6378	9566
0.57	308	616	923	1231	3078	6156	9234
0.58	297	595	892	1189	2973	5945	8918
0.59	287	575	862	1149	2873	5745	8618
0.60	278	556	833	1111	2778	5556	8333
0.61	269	537	806	1075	2687	5375	8062
0.62	260	520	780	1041	2601	5203	7804
0.63	252	504	756	1008	2520	5039	7559
0.64	244	488	732	977	2441	4883	7324
0.65	237	473	710	947	2367	4734	7101
0.66	230	459	689	918	2296	4591	6887
0.67	223	446	668	891	2228	4455	6683
0.68	216	433	649	865	2163	4325	6488
0.69	210	420	630	840	2100	4201	6301
0.70	204	408	612	816	2041	4082	6122
0.71	198	397	595	793	1984	3967	5951
0.72	193	386	579	772	1929	3858	5787
0.73	188	375	563	751	1877	3753	5630
0.74	183	365	548	730	1826	3652	5478
0.75	178	356	533	711	1778	3556	5333
0.76	173	346	519	693	1731	3463	5194
0.77	169	337	506	675	1687	3373	5060
0.78	164	329	493	657	1644	3287	4931
0.79	160	320	481	641	1602	3205	4807
0.80	156	313	469	625	1563	3125	4688
0.81	152	305	457	610	1524	3048	4572
0.82	149	297	446	595	1487	2974	4462
0.83	145	290	435	581	1452	2903	4355
0.84	142	283	425	567	1417	2834	4252
0.85	138	277	415	554	1384	2768	4152
0.86	135	270	406	541	1352	2704	4056
0.87	132	264	396	528	1321	2642	3964
0.88	129	258	387	517	1291	2583	3874
0.89	126	252	379	505	1262	2525	3787
0.90	123	247	370	494	1235	2469	3704
0.91	121	242	362	483	1208	2415	3623
0.92	118	236	354	473	1181	2363	3544
0.93	116	231	347	462	1156	2312	3469
0.94	113	226	340	453	1132	2263	3395
0.95	111	222	332	443	1108	2216	3324
0.96	109	217	326	434	1085	2170	3255
0.97	106	213	319	425	1063	2126	3188
0.98	104	208	312	416	1041	2082	3124
0.99	102	204	306	408	1020	2041	3061
1.00	100	200	300	400	1000	2000	3000

※ When the Imax current is 4In or more, ground fault setting is less than 0.5In.
When Imax current is 6In or more, it is not operated at less than 0.8In
No ground fault when Imax current is more than 8In

Memo

Ordering sheet

If rated current or the order you placed is different from the ordering sheet listed below, please fill out another ordering sheet upon your specification.

Receipt	LSIS co., Ltd			Order Day				Distributor Name	
Project				Contractor					
Delivery place				Delivery date		PNL Maker			
ACB Main body	Type of ACB		● DC ACB		● DC Switch-disconnectors				
			☐ ADH ☐ ADV		☐ DDH		☐ DDV		
	Frame size		☐ 1600AF ☐ 2500AF ☐ 3200AF		☐ 800AF ☐ 1000AF ☐ 1250AF ☐ 1600AF ☐ 2000AF ☐ 2500AF ☐ 3200AF ☐ 4000AF				
	Rated current (Rating Plug)		A		Not Applied				
	No.of poles		☐ 3-pole	☐ 4-pole	☐ 3-pole	☐ 4-pole	☐ 3-pole	☐ 4-pole	
	Rated voltage		☐ ~750VDC	☐ ~1000VDC	☐ ~750VDC	☐ ~1200VDC	☐ ~1000VDC	☐ ~1500VDC	
			☐ ~1000VDC	☐ ~1500VDC					
	Trip unit		☐ YES	☐ NO					
	Installation type		☐ Draw-out type			☐ Fixed type			
	Closing type		☐ Manual closing						
			☐ Electrical closing						
		• Charge method				☐ Standard type (OFF-Charge method)			
						☐ Rapid auto-reclosing type (ON-Charge method)			
		• Motor operating voltage			☐ AC/DC 100V~130V	☐ DC 125V	☐ 24V~30V	☐ DC 48V~60V	
					☐ AC/DC 200V~250V	☐ AC 380V~415V	☐ AC 440V~480V	☐ AC 48V	
	Closing voltage		☐ AC/DC 100V~130V	☐ DC 125V	☐ AC/DC 200V~250V	☐ DC 24V~30V	☐ DC 48V~60V	☐ AC 380V~480V	☐ AC 48V
	Trip voltage		☐ AC/DC 100V~130V	☐ DC 125V	☐ AC/DC 200V~250V	☐ DC 24V~30V	☐ DC 48V~60V	☐ AC 380V~480V	☐ AC 48V
Cradle	Cradle type		☐ No Safety Shutter (E class)			☐ Safety Shutter Attachment (F class)			
Bus-bar connection	Bus-bar type		☐ Vertical	☐ Horizontal	☐ Flat	☐ Top: Horizontal, Bottom: Vertical	☐ Top: Vertical, Bottom: Horizontal		☐ Customer mounting
ACB Accessory	Main body	Standard Accessory	• Aux. contact	☐ Standard type (3a3b, standard installation)		☐ Extended type (5a5b) Note 1)		☐ High capacity (5a5b) Note 1)	
			• Key Lock			☐ Single Key (ON-Lock)		☐ Double Key (ON-Lock)	
			• Undervoltage trip device (UVT, Instantaneous type)			☐ AC/DC 100V~130V	☐ DC 125V	☐ AC/DC 200V~250V	
						☐ DC 24V~30V	☐ DC 48V~60V	☐ AC 380V~480V	☐ AC 48V
			• Mechanical operation contact (MOC), Door Interlock (DI)			☐ Non-attachment type		☐ Attachment type	
			• Mechanical Interlock (MI)			☐ Non-attachment type		☐ Attachment type	
			• Counter			Default			
			• Miss insertion preventive device (MIP)			☐ Non-attachment type		☐ Attachment type	
			• Spring energy auto releasing device			☐ Non-attachment type		☐ Attachment type	
			• Double trip device (Same with Shunt voltage)			☐ Non-attachment type		☐ Attachment type	
			• Ready-to-close contact			☐ Non-attachment type		☐ Attachment type	
			• Trip Alarm switch, Manual Reset Button			☐ Non-attachment type		☐ Attachment type	
			☐ Key Interlock (K2, ON–Lock)			☐ ON/OFF Button Lock		☐ Temperature sensor	
	ACB Cradle	Standard Accessory	☐ Safety Shutter Lock						
			☐ Arc cover - Default						
	Separate purchase	Main body mounting	☐ Insulation barrier						
		Cradle mounting	• Cell switch (CL)		☐ 4c	☐ 8c			
			☐ Door Interlock						
			• Mechanical operation contact (MOC)			☐ Standard type (10a10b)		☐ High capacity (10a10b)	
			• Mechanical Interlock (MI)			☐ Wire type (2 terminals)		☐ Wire type (3 terminals)	
			• Shortening b-contact (SBC, 4b Max)			☐ 1b	☐ 2b ☐ 3b	☐ 4b	
			• Miss insertion preventive device (MIP)			☐ Non-attachment type		☐ Attachment type	
			☐ Cradle fixing block		☐ Control terminal cover	☐ Spring energy auto releasing device			
			☐ Racking Interlock		☐ Insulation barrier - Default				
		External mounting	• UVT time delay controller			☐ AC/DC 100V~130V	☐ DC 125V	☐ AC/DC 200V~250V	
						☐ DC 48V~60V	☐ AC 380V~480V		☐ AC 48V
			☐ Door Frame (DF)		☐ Condenser trip device (CTD)		☐ OCR Tester (DC)		
			☐ Dust Cover		☐ Temperature Sensor	☐ Remote closing & trip			

Note) 1. IAux. contact with extended/high capacity type adopts the rapid auto-reclosing method and available up to 6a6b.

FUTURING SMART ENERGY

We open up a brighter future through
efficient and convenient energy solutions.

Safety Instructions

- For your safety, please read user's manual thoroughly before operating.
- Contact the nearest authorized service facility for examination, repair, or adjustment.
- Please contact qualified service technician when you need maintenance.
  Do not disassemble or repair by yourself!
- Any maintenance and inspection shall be performed by the personnel having expertise concerned.

- According to The WEEE Directive, please do not discard the device with your household waste.

LS IS

www.lsis.com

■ Head Quarter

127 LS-ro (Hogye-dong) Dongan-gu, Anyang-si,
Gyeonggi-Do, 14119, Korea
Tel. 82-2-2034-4848, 4671, 4429 Fax: 82-2-2034-4555

■ Overseas Subsidiaries

- **LSIS(Dalian) Co., Ltd.** (Dalian, China)
  Tel: 86-411-8730-7510 Fax: 86-411-8730-7560 E-Mail: dskim@lsis.com
- **LSIS(Wuxi) Co., Ltd.** (Wuxi, China)
  Tel: 86-510-8534-6666-8005 Fax: 86-510-8534-4078 E-Mail: sojin@lsis.com
- **LS VINA Industrial Systems Co., Ltd** (Hanoi, Vietnam)
  Tel: 84-24-3882-0222 Fax: 84-24-3882-0220 E-Mail: jhchoi4@lsis.com
- **LSIS Middle East FZE** (Dubai, U.A.E.)
  Tel: 971-4-886-5360 Fax: 971-4-886-5361 E-Mail: hschoib@lsis.com
- **LSIS Europe B.V.** (Amsterdam, Netherlands)
  Tel: 31-20-654-1420 Fax: 31-20-654-1429 E-Mail: htha@lsis.com
- **LSIS Japan Co., Ltd.** (Tokyo, Japan)
  Tel: 81-3-6268-8241 Fax: 81-3-6268-8240 E-Mail: bmin@lsis.com
- **LSIS USA Inc.** (Chicago, U.S.A)
  Tel: 1-800-891-2941 Fax: 1-847-383-6543 E-Mail: sales.us@lsis.com

Technical Question or After-sales Service

Customer Center-Quick Responsive Service, Excellent technical support | **82-1644-5481**

■ Overseas Branches

- **LSIS Shanghai Office** (China)
  Tel: 86-21-5237-9977 Fax: 86-21-5237-7189
- **LSIS Beijing Office** (China)
  Tel: 86-10-5761-3127 Fax: 86-10-5761-3128 E-Mail: htroh@lsis.com
- **LSIS Guangzhou Offce** (China)
  Tel: 86-20-8326-6784 Fax: 80-20-8326-6287 E-Mail: sojhtroh@lsis.com
- **LSIS Qingdao Office** (China)
  Tel: 86-532-8501-6058 Fax: 86-532-8501-6057 E-Mail: htroh@lsis.com
- **LSIS Chengdu Office** (China)
  Tel: 86-28-8670-3200 Fax: 86-28-8670-3203 E-Mail: yangcf@lsis.com
- **LSIS ShenYang Office** (China)
  Tel: 86-24-2321-9050 Fax: 86-24-8386-7210 E-Mail: yangcf@lsis.com
- **LSIS Jinan Office** (China)
  Tel: 86-531-8699-7826 Fax: 86-531-8697-7628 E-Mail: yangcf@lsis.com
- **LSIS Co., Ltd. Tokyo Office** (Japan)
  Tel: 81-3-6268-8241 Fax: 81-3-6268-8240 E-Mail: jschuna@lsis.com
- **LSIS Co., Ltd. Rep. Office** (Vietnam)
  Tel: 84-28-3823-7890 E-Mail: sjbaik@lsis.com
- **LSIS Moscow Office** (Russia)
  Tel: 7-499-682-6130 E-Mail: jdpark1@lsis.com
- **LSIS Jakarta Office** (Indonesia)
  Tel: 62-21-2933-7614 E-Mail: dioh@lsis.com
- **LSIS Bangkok Office** (Thailand)
  Tel: 66-90-950-9683 E-Mail: sjleet@lsis.com

2019. 06

Specifications in this catalog are subject to change without notice due to continuous product development and improvement.

©2017. 11 LSIS Co.,Ltd. All rights reserved. / English (03) 2019. 06 Staffcom